aiwa

aiwa SERVICE

NSX-AVH9

SERVICE MANUAL

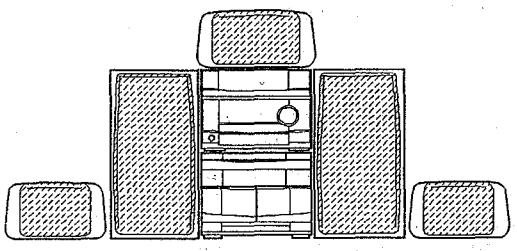

COMPACT DISC STEREO
CASSETTE RECEIVER

- BASIC TAPE MECHANISM: 2ZM-3MK2 PR2N
- BASIC CD MECHANISM: 4ZG-1WRNM
- TYPE.HE,HR

- If requiring information about the CD mechanism, see Service Manual of 4ZG-1WR. (S/M Code No. 09-965-128-10T)
- If requiring information about the FD-NH9/NH90, see Service Manual of NSX-H9/H90. (S/M Code No. 09-966-141-50T)

SYSTEM	AMPLIFIER	CASSETTE DECK CD PLAYER	REMOTE CONTROLLER	SPEAKERS
NSX-AVH9	RX-NAVH9	FD-NH9	RC-T506	SX-NAVH9 SX-C400 SX-R230

S/M Code No. 09-967-155-10T

SPECIFICATIONS

STEREO RECEIVER RX-NAVH9

FM tuner section

Tuning range	87.5 MHz to 108 MHz
Usable sensitivity (IHF)	13.2 dBf
Antenna terminals	75 ohms (unbalanced)

AM tuner section

Tuning range	531 kHz to 1602 kHz (9 kHz step) 530 kHz to 1710 kHz (10 kHz step)
Usable sensitivity	350 µV/m
Antenna	Loop antenna

Amplifier section

Power output	**Front** (without connecting to the SURROUND SPEAKERS) Rated: 95 W + 95 W (6 ohms, T.H.D. 1%, 1 kHz) Reference: 80 W + 80 W (6 ohms, T.H.D. 10%, 1 kHz) **Rear (Surround)** Rated: 18 W + 18 W (16 ohms, T.H.D. 1%, 1 kHz) Reference: 20 W + 20 W (16 ohms, T.H.D. 10%, 1 kHz) ***Center*** Rated: 18 W (8 ohms, T.H.D. 1 %, 1 kHz) Reference: 20 W (8 ohms, T.H.D. 10%, 1 kHz)
Total harmonic distortion	0.1 % (60 W, 1 kHz, 6 ohms)
Inputs	VIDEO 1/MD IN: 200mV (adjustable) VIDEO 2/AUX IN: 200 mV (adjustable) MIC 1, MIC 2: 1 mV (10 kohms)
Outputs	LINE OUT: 200 mV SUPER WOOFER: 2.6 V SPEAKERS: accept speakers of 6 ohms or more SURROUND SPEAKERS: accept speakers of 16 ohms or more PHONES (stereo jack): accepts headphones of 32 ohms or more

General

Power requirements	120 V/220 – 230 V/240 V AC, switchable 50/60 Hz
Power consumption	160 W (system 180 W)
Dimensions of main unit (W × H × D)	260 × 198 × 333.5 mm
Weight of main unit	6.5 kg

COMPACT DISC/STEREO CASSETTE DECK FD-NH9

Cassette deck section

Track format	4 tracks, 2 channels stereo
Frequency response	Metal tape: 35 Hz – 17000 Hz CrO_2 tape: 50 Hz – 16000 Hz Normal tape: 55 Hz – 15000 Hz
Signal-to-noise ratio	75 dB (Dolby C NR ON, Metal tape peak level)
Recording system	AC bias
Heads	Deck 1: Playback head × 1 Deck 2: Recording/playback/erase head × 1

Compact disc player section

Laser	Semiconductor laser (λ = 780 nm)
D-A converter	1 bit dual
Signal-to-noise ratio	85 dB (1 kHz, 0 dB)
Harmonic distortion	0.03 % (1 kHz, 0 dB)
Wow and flutter	Unmeasurable

General

Dimensions (W × H × D)	260 × 203 × 321.5 mm
Weight	3.9 kg

Speaker system SX-NAVH9

Cabinet type	3 way, bass reflex (magnetic sealed type)
Speakers	Woofer: *140 mm cone type* Tweeter: 60 mm cone type Super tweeter: *20 mm ceramic type*
Impedance	6 ohms
Output sound pressure level	88 dB/W/m
Dimensions (W × H × D)	230 × 396 × 265 mm
Weight	4.5 kg

- Design and specifications are subject to change without notice.
- Dolby noise reduction manufactured under license from Dolby Laboratories Licensing Corporation.
  "DOLBY" and the double-D symbol ⧈ and "PRO LOGIC" are trademarks of Dolby Laboratories Licensing Corporation.
  Laboratories Licensing Corporation.
- The word "BBE" and the "BBE symbol" are trademarks of BBE Sound,Inc.
  Under license from BBE Sound,Inc.

MODEL NO.

RX-NAVH9

ELECTRICAL MAIN PARTS LIST

DESCRIPTION で判断できない物は "REFERENCE NAME LIST" を参照してください。
If can't understand for Description please kindly refer to "REFERENCE NAME LIST".

REF. NO.	PART NO.	カンリ NO.	DESCRIPTION
IC			
	87-A20-069-049		C-IC,BA3842F
	87-A20-067-040		C-IC,M65849FP
	87-A20-191-019		IC,STK-419-140A
	87-A20-082-010		C-IC,NJW1102AFG1
	87-017-888-080		C-IC,NJM4558MD
	87-017-888-089		IC,NJM4558MD
	87-017-915-089		IC,BU4094BCF
	87-017-804-019		IC,BU4052BC
	87-A20-083-019		IC,BA3835S
	87-A20-107-019		IC,BA3836
	87-017-914-019		IC,BU4094 BC
	87-A20-056-019		IC,BA3880S
	87-070-267-010		C-IC,STK405-050
	87-070-127-119		IC,LC72131D
	87-017-714-119		IC,LA1836L
	86-NT1-620-010		IC,LC 866424V-5A99
	87-070-083-019		IC,GP1U281X
TRANSISTOR			
	89-213-702-019		TR,2SB1370E
	89-109-352-089		TR,2SA 935 Q
	87-026-610-089		TR, KTC3198GR
	89-332-665-089		TR,2SC3266GR
	89-337-221-389		C-TR,2SC3722K
	89-324-122-089		C-TR,2SC 2412R
	89-110-372-089		C-TR,2SA1037 R
	89-110-373-089		C-TR,2SA1037 S
	87-026-210-089		C-TR,DTC144EK T147
	87-026-235-080		C-TR,DTC114EK
	89-421-141-289		C-TR,2SD2114K,UV
	87-026-609-089		TR, KTA1266GR
	89-109-373-089		TR,2SA1037S
	89-112-965-089		TR,2SA1296GR
	87-026-228-089		C-TR DTA124EK
	89-113-187-089		TR,2SA1318TU
	87-A30-047-080		TR,CSD655E
	89-333-266-089		C-TR,2SC3326B
	89-110-155-080		TR,2SA1015GR
	87-026-610-080		TR,KTC3198GR
	87-026-609-080		TR,KTA1266GR
	87-026-214-089		TR,DTA114YS
	87-026-211-089		C-TR,DTA144EK T147
	89-327-125-089		C-TR,2SC2712GR
	89-327-143-089		C-TR,2SC2714 (O)
	87-026-226-089		C-TR,DTA143EK
	89-505-434-589		C-FET,2SK543(4/5)
DIODE			
	87-A40-116-069		DIODE,RS403L-B-D-51
	87-A40-115-069		DIODE,SA D102
	87-070-274-089		DIODE,1N4003 SEM
	87-020-027-089		C-DIODE,1SS184
	87-020-125-089		C-DIODE,1SS181
	87-020-465-089		DIODE,1SS133
	87-017-174-089		ZENER,HZS11A3L
	87-017-146-089		ZENER,HZS30-2
	87-001-290-089		ZENER,HZS5C1
	87-017-093-080		ZENER,HZS5C3
	87-A40-116-060		DIODE,RS403L-B-D-51
	87-017-148-089		ZENER,HZS6A1L
	87-001-731-089		ZENER HZS6C2L
	87-001-911-089		ZENER,UTZJ4.7A (TAPG)
MAIN C.B			
C101	87-016-520-099		CAP E 3300-65
C102	87-016-520-099		CAP E 3300-65
C104	87-010-235-089		CAP,E 470-16 SME
C105	87-010-235-089		CAP,E 470-16 SME
C106	87-016-285-089		CAP,E 47-100 SME
C107	87-A10-253-089		CAP,E 3.3-50 BP
C108	87-010-407-089		CAP,E 33-50 SME
C109	87-010-263-089		CAP,E 100-10 SME 5X11
C112	87-010-382-089		CAP,E 22-25 SME
C113	87-010-403-089		CAP,E 3.3-50 SME
C116	87-012-140-089		C-CAP,S 470P-50 CH
C121	87-012-368-089		C-CAP,S 0.1-50 F
C122	87-012-368-089		C-CAP,S 0.1-50 F
C123	87-012-368-089		C-CAP,S 0.1-50 F
C124	87-012-368-089		C-CAP,S 0.1-50 F
C125	87-010-263-089		CAP,E 100-10 SME 5X11
C126	87-010-189-080		C-CAP,S 8200P-50 K B
C127	87-010-189-080		C-CAP,S 8200P-50 K B
C131	87-010-186-089		C-CAP,S 4700P-50 B
C132	87-010-186-089		C-CAP,S 4700P-50 B
C152	87-010-260-089		CAP,E 47-25 SME
C171	87-010-453-090		CAP,E 4700-25 SME
C172	87-010-453-090		CAP,E 4700-25 SME
C173	87-012-368-089		C-CAP S 0.1-50F
C174	87-012-368-089		C-CAP S 0.1-50F
C175	87-012-368-089		C-CAP S 0.1-50F
C176	87-012-368-089		C-CAP S 0.1-50F
C220	87-010-194-089		C-CAP,S 0.047-25 F
C221	37-010-545-089		CAP,E 0.22-50 SME
C222	87-010-545-089		CAP,E 0.22-50 SME
C225	87-012-157-089		C-CAP,S 330P-50 CH
C226	87-012-157-089		C-CAP,S 330P-50 CH
C227	87-010-402-089		CAP,E 2.2-50 SME
C228	87-010-402-089		CAP,E 2.2-50 SME
C229	87-010-403-080		CAP,E 3.3-50 SME
C230	87-010-403-080		CAP,E 3.3-50 SME
C231	87-018-099-089		CAP,TC-U 3.9P-50 CH
C232	87-018-099-089		CAP,TC-U 3.9P-50 CH
C233	87-010-196-089		C-CAP,S 0.1-25 F
C234	87-010-196-089		C-CAP,S 0.1-25 F
C235	87-010-196-089		C-CAP,S 0.1-25 F
C236	87-010-196-089		C-CAP,S 0.1-25 F
C240	87-010-197-089		C-CAP,S 0.01-25 B
C245	87-012-368-089		C-CAP,S 0.1-50 F
C500	87-010-405-089		CAP,E 10-50 SME
C501	87-010-213-089		C-CAP,S 0.015-25 B
C502	87-010-213-089		C-CAP,S 0.015-25 B
C503	87-010-179-089		C-CAP,S 1200P-50 B
C504	87-010-179-089		C-CAP,S 1200P-50 B
C505	87-010-546-089		CAP,E 0.33-50 SME
C506	87-010-546-089		CAP,E 0.33-50 SME
C507	87-010-196-089		C-CAP,S 0.1-25 F
C508	87-010-196-089		C-CAP,S 0.1-25 F
C530	87-010-197-089		C-CAP,S 0.01-25 B
C531	87-010-183-089		C-CAP,S 2700P-50 B
C532	87-010-194-089		C-CAP,S 0.047-25 F
C533	87-010-196-089		C-CAP,S 0.1-25 F

REF. NO.	PART NO.	カンリ NO.	DESCRIPTION
C534	87-010-263-089		CAP,E 100-10 SME 5X11
C535	87-010-404-089		CAP,E 4.7-50 SME
C536	87-010-404-089		CAP,E 4.7-50 SME
C537	87-010-545-089		CAP,E 0.22-50 SME
C539	87-010-194-089		C-CAP,S 0.047-25 F
C540	87-010-384-089		CAP,E 100-25 SME
C541	87-010-404-089		CAP,E 4.7-50 SME
C542	87-010-404-089		CAP,E 4.7-50 SME
C560	87-010-318-080		C-CAP,S 47P-50 J CH
C561	87-010-318-080		C-CAP,S 47P-50 J CH
C562	87-010-318-080		C-CAP,S 47P-50 J CH
C563	87-012-142-089		C-CAP,S 0.33-16 F
C564	87-010-196-089		C-CAP,S 0.1-25 F
C565	87-018-209-089		CAP,TC-U 0.1-50 F
C566	87-010-196-089		C-CAP,S 0.1-25 F
C601	87-010-184-089		C-CAP,S 3300P-50 B
C602	87-010-184-089		C-CAP,S 3300P-50 B
C603	87-010-405-089		CAP,E 10-50 SME
C604	87-010-405-089		CAP,E 10-50 SME
C605	87-010-260-089		CAP,E 47-25 SME
C606	87-010-101-089		CAP,E 220-16 SME
C607	87-010-188-089		C-CAP,S 6800P-50 B
C608	87-010-188-089		C-CAP,S 6800P-50 B
C609	87-018-127-089		CAP,TC-U 470P-50 B
C610	87-018-127-089		CAP,TC-U 470P-50 B
C611	87-010-197-089		C-CAP,S 0.01-25 B
C612	87-010-197-089		C-CAP,S 0.01-25 B
C613	87-010-195-089		C-CAP,S 0.068-25 F
C614	87-010-195-089		C-CAP,S 0.068-25 F
C615	87-010-404-089		CAP,E 4.7-50 SME
C616	87-010-404-089		CAP,E 4.7-50 SME
C617	87-010-404-089		CAP,E 4.7-50 SME
C618	87-010-404-089		CAP,E 4.7-50 SME
C701	87-010-381-089		CAP,E 330-16 SME
C702	87-010-404-089		CAP,E 4.7-50 SME
C703	87-010-197-089		C-CAP,S 0.01-25 B
C704	87-010-197-089		C-CAP,S 0.01-25 B
C711	87-010-263-089		CAP,E 100-10 SME 5X11
C712	87-010-196-089		C-CAP,S 0.1-25 F
C715	87-010-197-089		C-CAP,S 0.01-25 B
C716	87-010-197-089		C-CAP,S 0.01-25 B
C722	87-010-152-089		C-CAP,S 8P-50 CH
C723	87-010-178-089		C-CAP,S 1000P-50 B
C725	87-010-178-089		C-CAP,S 1000P-50 B
C727	87-010-196-089		C-CAP,S 0.1-25 F
C728	87-010-248-089		CAP,E 220-10 SME
C760	87-010-197-089		C-CAP,S 0.01-25 B
C761	87-010-196-089		C-CAP,S 0.1-25 F
C770	87-010-405-089		CAP,E 10-50 SME
C771	87-010-405-089		CAP,E 10-50 SME
C772	87-010-194-089		C-CAP,S 0.047-25 F
C773	87-010-196-089		C-CAP,S 0.1-25 F
C774	87-010-263-089		CAP,E 100-10 SME 5X11
C775	87-010-405-089		CAP,E 10-50 SME
C776	87-010-197-089		C-CAP,S 0.01-25 B
C777	87-010-400-089		CAP,E 0.47-50 SME
C778	87-010-401-089		CAP,E 1-50 SME
C779	87-010-401-089		CAP,E 1-50 SME
C780	87-010-197-089		C-CAP,S 0.01-25 B
C781	87-010-405-089		CAP,E 10-50 SME
C782	87-010-405-089		CAP,E 10-50 SME
C787	87-010-184-089		C-CAP,S 3300P-50 B
C788	87-010-184-089		C-CAP,S 3300P-50 B
C789	87-010-179-089		C-CAP,S 1200P-50 B
C790	87-010-179-089		C-CAP,S 1200P-50 B
C791	87-010-401-089		CAP,E 1-50 SME
C792	87-010-180-089		C-CAP,S 1500P-50 B
C793	87-010-189-089		C-CAP,S 8200P-50 B
C794	87-010-408-089		CAP,E 47-50 SME
C795	87-010-194-089		C-CAP,S 0.047-25 F
C796	87-010-403-089		CAP,E 3.3-50 SME
C801	87-018-134-089		CAP,TC-U0.01-16 Y

REF. NO.	PART NO.	カンリ NO.	DESCRIPTION
C813	87-018-134-089		CAP,TC-U0.01-16 Y
C814	87-010-197-089		C-CAP,S 0.01-25 B
C815	87-018-134-089		CAP,TC-U 0.01-16 Y
C816	87-018-134-089		CAP,TC-U 0.01-16 Y
C817	87-010-197-089		C-CAP,S 0.01-25 B
C818	87-010-197-089		C-CAP,S 0.01-25 B
C819	87-010-197-089		C-CAP,S 0.01-25 B
C820	87-010-408-089		CAP,E 47-50 SME
C821	87-010-197-089		C-CAP,S 0.01-25 B
C822	87-010-197-089		C-CAP,S 0.01-25 B
C823	87-010-197-089		C-CAP,S 0.01-25 B
C828	87-010-196-089		C-CAP,S 0.1-25 F
C829	87-010-196-089		C-CAP,S 0.1-25 F
C940	87-010-197-089		C-CAP,S 0.01-25 B
C946	87-010-401-089		CAP,E 1-50 SME
C960	87-010-196-089		C-CAP,S 0.1-25 F
C961	87-010-152-089		C-CAP,S 8P-50 CH
CF801	87-008-261-019		FLTR,SFE10.7MA5-A
CF802	87-008-261-019		FLTR,SFE10.7MA5-A
FFE801	A8-6ZA-190-039		6ZA-1FEUNM
J252	87-A60-031-010		JACK,6.3 BLK ST W/S
J253	87-099-801-010		JACK,PIN 1P BLK
J254	87-033-240-019		TERMINAL,SP 4P32SV1-05
J801	87-033-235-019		TERMINAL,ANT (H)
L101	87-003-383-019		COIL,1UH-S
L102	87-003-383-019		COIL,1UH-S
L701	87-003-293-019		COIL,TRAP MPX
L702	87-003-293-019		COIL,TRAP MPX
L741	87-A50-015-019		COIL,FM DET(TOK)
L742	87-A90-051-019		FLTR,CFAZ-450(TOK)
L770	87-003-102-089		COIL,10UH
L832	87-003-098-089		COIL,2.2UH
L981	86-NF4-665-019		AM PACK 1(TOK)
⚠PR106	87-026-689-080		PROTECTOR,1A 491SERIES 60V
R105	87-022-600-089		RES,M/F 0.1-2W J
R106	87-022-600-089		RES,M/F 0.1-2W J
RY101	87-045-389-019		RELAY,OSA-SS-212DM5
SFR722	87-024-432-080		SFR,4.7K H RH063MC
TC701	87-011-253-089		TRIMER,30P LAR
TH240	87-A90-221-080		C-THMS,100K
W101	85-NF5-628-019		F-CABLE 7P-2.5
W304	86-NT2-655-010		CORD,FG15P
X703	84-508-618-019		VIB,CER CSB 456 F15
X721	87-030-372-019		VIB,XTAL 7.2MHZ

FRONT C.B

C101	87-010-401-049		CAP,E 1-50 SME
C102	87-010-401-049		CAP,E 1-50 SME
C103	87-010-182-089		C-CAP,S 2200P-50 B
C104	87-010-182-089		C-CAP,S 2200P-50 B
C105	87-010-545-049		CAP E 0.22-50 SME
C106	87-010-545-049		CAP E 0.22-50 SME
C107	87-010-993-089		C-CAP,S 0.056-25 B
C108	87-010-993-089		C-CAP,S 0.056-25 B
C109	87-012-393-089		C-CAP,S 0.22-16,R,X
C110	87-012-393-089		C-CAP,S 0.22-16,R,X
C111	87-010-401-049		CAP,E 1-50 SME
C112	87-010-260-049		CAP,E 47-25 SME
C113	87-010-405-049		CAP,E 10-50 SME
C114	87-010-406-049		CAP,E 22-50 SME
C115	87-010-196-089		C-CAP,S 0.1-25 F
C401	87-010-196-089		C-CAP,S 0.1-25 F
C402	87-010-196-089		C-CAP,S 0.1-25 F
C450	87-010-112-049		CAP,E 100-16
C470	87-010-112-049		CAP,E 100-16
C501	87-010-322-089		C-CAP,S 100P-50 CH
C502	87-010-196-089		C-CAP,S 0.1-25 F
C503	87-010-196-089		C-CAP,S 0.1-25 F
C504	87-010-196-089		C-CAP,S 0.1-25 F
C505	87-010-196-089		C-CAP,S 0.1-25 F
C506	87-010-196-089		C-CAP,S 0.1-25 F

REF. NO.	PART NO.	カンリ NO.	DESCRIPTION
C601	87-010-196-089		C-CAP,S 0.1-25 F
C602	87-010-545-049		CAP E 0.22-50 SME
C603	87-010-321-089		C-CAP,S 82P-50 CH
C604	87-010-196-089		C-CAP,S 0.1-25 F
C605	87-010-196-089		C-CAP,S 0.1-25 F
C608	87-010-177-089		C-CAP,S 820P-50 SL
C609	87-016-251-049		CAP,E220-16 SMG
C610	87-010-405-049		CAP,E 10-50 SME
C611	87-010-405-049		CAP,E 10-50 SME
C612	87-010-406-049		CAP,E 22-50 SME
C613	87-010-401-049		CAP,E 1-50 SME
C615	87-010-186-089		C-CAP,S 4700P-50 B
C801	87-010-555-049		CAP,E 100-10 GAS
C802	87-010-074-080		CAP,E 4.7-35 5L
C803	87-010-494-049		CAP,E 1-50 GAS
C804	87-A10-189-049		CAP,E 220-10
C805	87-010-196-089		C-CAP,S 0.1-25 F
C806	87-010-196-089		C-CAP,S 0.1-25 F
C821	87-010-312-089		C-CAP,S 15P-50 CH
C822	87-010-180-089		C-CAP,S 1500P-50 B
C823	87-010-498-040		CAP,E 10-16 5L SRE
C824	87-010-302-080		C-CAP,S 270P-50 CH
C901	87-010-405-049		CAP,E 10-50 SME
C902	87-010-405-049		CAP,E 10-50 SME
C903	87-010-408-049		CAP-E 47-50 SME
FC1	88-904-201-219		FF-CABLE 4P 1.25
FL801	86-NT1-636-019		FL,BJ451GK
J601	82-NF7-630-019		JACK,3.5 MO
J602	82-NF7-630-019		JACK,3.5 MO
L820	87-A50-052-019		COIL,CLOCK 5.76MHZ T1
LED401	87-070-199-089		LED,SLP738F-81-S-T1
LED402	87-070-199-089		LED,SLP738F-81-S-T1
LED403	87-070-199-089		LED,SLP738F-81-S-T1
LED404	87-070-199-089		LED,SLP738F-81-S-T1
LED405	87-070-199-089		LED,SLP738F-81-S-T1
LED406	87-070-199-089		LED,SLP738F-81-S-T1
LED407	87-070-199-089		LED,SLP738F-81-S-T1
LED408	87-070-199-089		LED,SLP738F-81-S-T1
LED409	87-070-199-089		LED,SLP738F-81-S-T1
LED410	87-070-199-089		LED,SLP738F-81-S-T1
LED411	87-070-201-089		LED,SLP9118C-51-S-T1
LED412	87-070-201-089		LED,SLP9118C-51-S-T1
LED413	87-070-201-089		LED,SLP9118C-51-S-T1
LED414	87-070-201-089		LED,SLP9118C-51-S-T1
LED415	87-070-201-089		LED,SLP9118C-51-S-T1
LED421	87-070-198-089		LED,SLP736A-81-S-T1
LED422	87-070-198-089		LED,SLP736A-81-S-T1
LED423	87-070-198-089		LED,SLP736A-81-S-T1
LED424	87-070-198-089		LED,SLP736A-81-S-T1
LED425	87-070-198-089		LED,SLP736A-81-S-T1
LED431	87-070-198-089		LED,SLP736A-81-S-T1
LED432	87-070-198-089		LED,SLP736A-81-S-T1
LED433	87-070-198-089		LED,SLP736A-81-S-T1
LED434	87-070-198-089		LED,SLP736A-81-S-T1
LED435	87-070-198-089		LED,SLP736A-81-S-T1
LED436	87-A40-188-089		LED,SLZ736A-17-S-T2
LED437	87-A40-188-089		LED,SLZ736A-17-S-T2
LED438	87-070-200-080		LED,SLP-636C-81-S-T1 ORN
LED439	87-070-200-080		LED,SLP-636C-81-S-T1 ORN
LED440	87-070-200-080		LED,SLP-636C-81-S-T1 ORN
LED441	87-070-200-080		LED,SLP-636C-81-S-T1 ORN
LED442	87-070-200-080		LED,SLP-636C-81-S-T1 ORN
LED443	87-070-200-080		LED,SLP-636C-81-S-T1 ORN
⚠PR465	87-A90-247-080		PROTECTOR,0.315A 60V 491
S920	87-A90-095-089		SW,TACT EVQ11G04M
S921	87-A90-095-089		SW,TACT EVQ11G04M
S922	87-A90-095-089		SW,TACT EVQ11G04M
S923	87-A90-095-089		SW,TACT EVQ11G04M
S924	87-A90-095-089		SW,TACT EVQ11G04M
S925	87-A90-095-089		SW,TACT EVQ11G04M
S926	87-A90-095-089		SW,TACT EVQ11G04M
S927	87-A90-095-089		SW,TACT EVQ11G04M
S928	87-A90-095-089		SW,TACT EVQ11G04M
S932	87-A90-095-089		SW,TACT EVQ11G04M
S933	87-A90-095-089		SW,TACT EVQ11G04M
S934	87-A90-095-089		SW,TACT EVQ11G04M
S935	87-A90-095-089		SW,TACT EVQ11G04M
S936	87-A90-095-089		SW,TACT EVQ11G04M
VR101	86-NT1-634-010		VR,RTRY 100KW -L20
VR601	87-A90-124-019		VR,RTRY 10KA L20

MVR C.B

REF. NO.	PART NO.	カンリ NO.	DESCRIPTION
C201	87-010-545-040		CAP,E 0.22-50 SME
C202	87-010-545-040		CAP,E 0.22-50 SME
C203	87-016-281-040		CAP,E 4.7-50 BP SME
C205	87-010-263-089		CAP,E 100-10 SME 5X11
C206	87-010-263-089		CAP,E 100-10 SME 5X11
C207	87-010-318-089		C-CAP,S 47P-50 CH
C208	87-010-318-089		C-CAP,S 47P-50 CH
C209	87-A10-229-080		C-CAP,S 0.68-10 K W5R
C210	87-010-197-089		C-CAP,S 0.01-25 B
C211	87-010-179-089		C-CAP,S 1200P-50 B
C212	87-010-196-089		C-CAP,S 0.1-25 F
C215	87-010-196-089		C-CAP,S 0.1-25 F
C216	87-010-187-089		C-CAP,S 5600P-50 B
C217	87-010-182-089		C-CAP,S 2200P-50 B
C218	87-012-393-089		C-CAP,S 0.22-16,R,K
C219	87-010-194-089		C-CAP,S 0.047-25 F
C220	87-010-181-080		C-CAP,S 1800P-50 K B
C221	87-010-196-089		C-CAP,S 0.1-25 F
C222	87-010-179-089		C-CAP,S 1200P-50 B
C223	87-010-177-089		C-CAP,S 820P-50 SL
C224	87-018-134-080		CAP,TC U 0.01-16 N Y UP050
C231	87-010-176-080		C-CAP,S 680P-50 J SL
C232	87-010-176-080		C-CAP,S 680P-50 J SL
C237	87-016-456-040		CAP,E 22-16 LLA
C238	87-010-384-040		CAP,E 100-25 SME
C239	87-010-196-080		C-CAP,S 0.1-25 Z F
C240	87-010-260-040		CAP,E 47-25 SME
C242	87-016-472-040		CAP,E 22-16 K SME
C243	87-010-263-040		CAP,E 100-10 SME
C244	87-016-081-080		C-CAP,S 0.1-16 K R
C245	87-010-405-040		CAP,E 10-50 SME
C246	87-010-405-040		CAP,E 10-50 SME
C247	87-010-405-040		CAP,E 10-50 SME
C248	87-010-405-040		CAP,E 10-50 SME
C249	87-010-405-040		CAP,E 10-50 SME
C250	87-016-251-040		CAP,E 220-16 SMG
C251	87-012-140-080		C-CAP,S 470P-50 J CH
C252	87-010-186-080		C-CAP,S 4700P-50 K B
C253	87-010-187-080		C-CAP,S 5600P-50 K B
C256	87-012-394-080		C-CAP, 0.68-16 K W5R CM/CB
C257	87-012-393-080		C-CAP,S 0.22-16 K W5R CM/CB
C258	87-012-393-080		C-CAP,S 0.22-16 K W5R CM/CB
C259	87-010-404-040		CAP,E 4.7-50 SME
C260	87-010-404-040		CAP,E 4.7-50 SME
C261	87-012-393-080		C-CAP,S 0.22-16 K W5R CM/CB
C262	87-012-393-080		C-CAP,S 0.22-16 K W5R CM/CB
C263	87-016-081-080		C-CAP,S 0.1-16 K R
C266	87-016-081-080		C-CAP,S 0.1-16 K R
C267	87-016-081-080		C-CAP,S 0.1-16 K R
C270	87-016-081-080		C-CAP,S 0.1-16 K R
C280	87-010-196-089		C-CAP,S 0.1-25 F
C281	87-010-402-040		CAP,E 2.2-50 SME
C282	87-010-402-040		CAP,E 2.2-50 SME
C283	87-010-400-040		CAP,E 0.47-50 SME
C284	87-010-400-040		CAP,E 0.47-50 SME
C285	87-010-263-089		CAP,E 100-10 SME 5X11
C286	87-010-384-089		CAP,E 100-25 SME
C287	87-010-322-080		C-CAP,S 100P-50 J CH
C288	87-010-322-080		C-CAP,S 100P-50 J CH
C301	87-010-402-049		CAP,E 2.2-50 SME
C302	87-010-402-049		CAP,E 2.2-50 SME

REF. NO.	PART NO.	カンリ NO.	DESCRIPTION
C303	87-010-404-049		CAP,E 4.7-50 SME
C304	87-010-404-049		CAP,E 4.7-50 SME
L201	87-005-481-089		COIL,47UH J FLR50
MVR281	86-NT1-632-010		VR,MOT 50KBX4 -L20
R257	87-025-407-080		RES,M/F 100K-1/8W F
TRAY C.B			
S937	87-A90-095-089		SW,TACT EVQ11G04M
S938	87-A90-095-089		SW,TACT EVQ11G04M
S939	87-A90-095-089		SW,TACT EVQ11G04M
S940	87-A90-095-089		SW,TACT EVQ11G04M
S941	87-A90-095-089		SW,TACT EVQ11G04M
S942	87-A90-095-089		SW,TACT EVQ11G04M
S945	87-036-110-019		SW,PUSH SPPB 62
S946	87-A90-095-089		SW,TACT EVQ11G04M
S947	87-A90-095-089		SW,TACT EVQ11G04M
S948	87-A90-095-089		SW,TACT EVQ11G04M
S949	87-A90-095-089		SW,TACT EVQ11G04M
S950	87-A90-095-089		SW,TACT EVQ11G04M
S951	87-A90-095-089		SW,TACT EVQ11G04M
S952	87-A90-095-089		SW,TACT EVQ11G04M
S953	87-A90-095-089		SW,TACT EVQ11G04M
S954	87-A90-095-089		SW,TACT EVQ11G04M
S955	87-036-110-019		SW,PUSH SPPB 62
AC-2 C.B			
⚠PR101	87-A90-195-089		PROTECTOR 7A125V491
⚠PR102	87-A90-195-089		PROTECTOR 7A125V491
PT-H C.B			
⚠	87-033-147-019		CLAMP,FUSE
⚠	82-304-743-019		TERMINAL 1P
⚠F101	87-035-193-010		FUSE,5A 250V T 218
⚠PT103	86-NT1-626-010		PT,6NT1PR-HR
⚠SW101	87-A90-165-010		SW,SL 1-2-3 SWS2301

REF. NO.	PART NO.	カンリ NO.	DESCRIPTION
MOTOR C.B			
C970	87-010-263-089		CAP,E 100-10 SME 5X11
C971	87-010-263-089		CAP,E 100-10 SME 5X11
M971	87-045-383-010		MOT,M9I T2
R-AMP C.B			
C701	87-012-368-080		C-CAP,S 0.1-50 Z F
C702	87-012-368-080		C-CAP,S 0.1-50 Z F
C703	87-010-398-090		CAP,E 2200-35 SME
C704	87-010-398-090		CAP,E 2200-35 SME
C705	87-010-401-040		CAP,E 1-50 SME
C706	87-010-194-080		C-CAP,S 0.047-25 K F
C707	87-012-140-080		C-CAP,S 470P-50 J CH
C708	87-012-140-080		C-CAP,S 470P-50 J CH
C709	87-010-402-040		CAP,E 2.2-50 SME
C710	87-010-402-040		CAP,E 2.2-50 SME
C711	87-010-405-040		CAP,E 10-50 SME
C712	87-010-405-040		CAP,E 10-50 SME
C715	87-010-147-080		C-CAP,S 3P-50 C CH GRM
C716	87-010-147-080		C-CAP,S 3P-50 C CH GRM
C717	87-010-993-080		C-CAP,S 0.056-25 J B
C718	87-010-993-080		C-CAP,S 0.056-25 J B
C719	87-010-196-080		C-CAP,S 0.1-25 Z F
C720	87-010-196-080		C-CAP,S 0.1-25 Z F
C721	87-010-193-080		C-CAP,S 0.033-25 K F
C722	87-010-193-080		C-CAP,S 0.033-25 K F
C723	87-010-197-080		C-CAP,S 0.01-25 K B
FC2	88-906-101-110		FF-CABLE, 6P 1.25
J701	87-099-803-010		JACK,PIN 3P OWR
L701	87-003-383-010		COIL,1UH K
L702	87-003-383-010		COIL,1UH K
R707	87-022-050-080		RES,M/F 0.22-1W J
R708	87-022-050-080		RES,M/F 0.22-1W J

○ チップ抵抗部品コード／CHIP RESISTOR PART CODE

チップ抵抗部品コードの成り立ち
Chip Resistor Part Coding

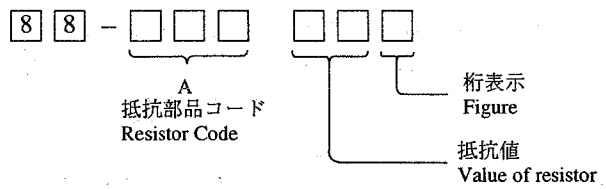

チップ抵抗
Chip resistor

容量 Wattage	種類 Type	許容誤差 Tolerance	記号 Symbol	寸法／Dimensions (mm) 外形／Form	L	W	t	抵抗コード：A Resistor Code: A
1／16W	1608	±5%	CJ	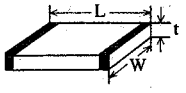	1.6	0.8	0.45	108
1／10W	2125	±5%	CJ		2	1.25	0.45	118
1／8W	3216	±5%	CJ		3.2	1.6	0.55	128

BLOCK DIAGRAM

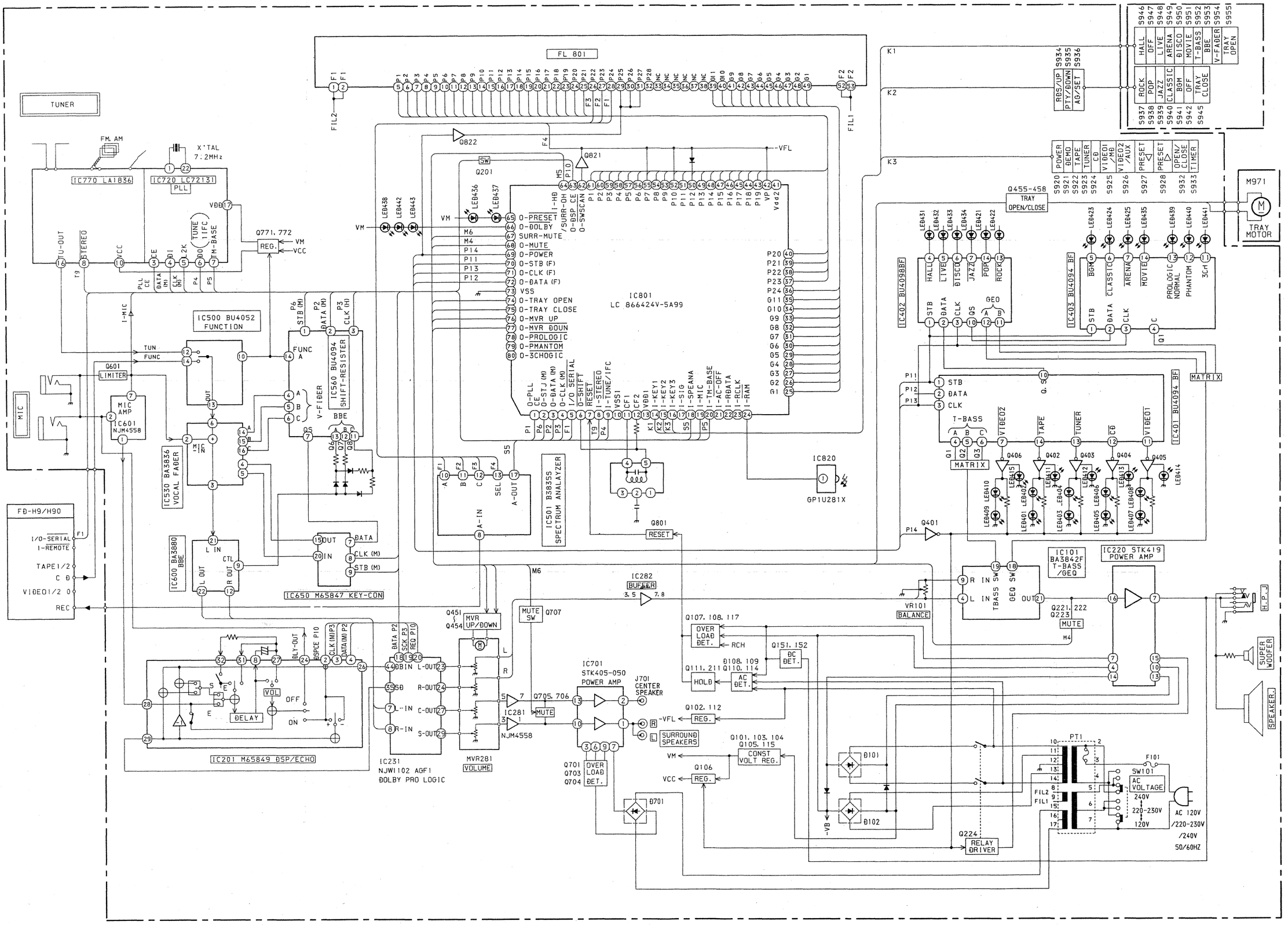

A MAIN C.B

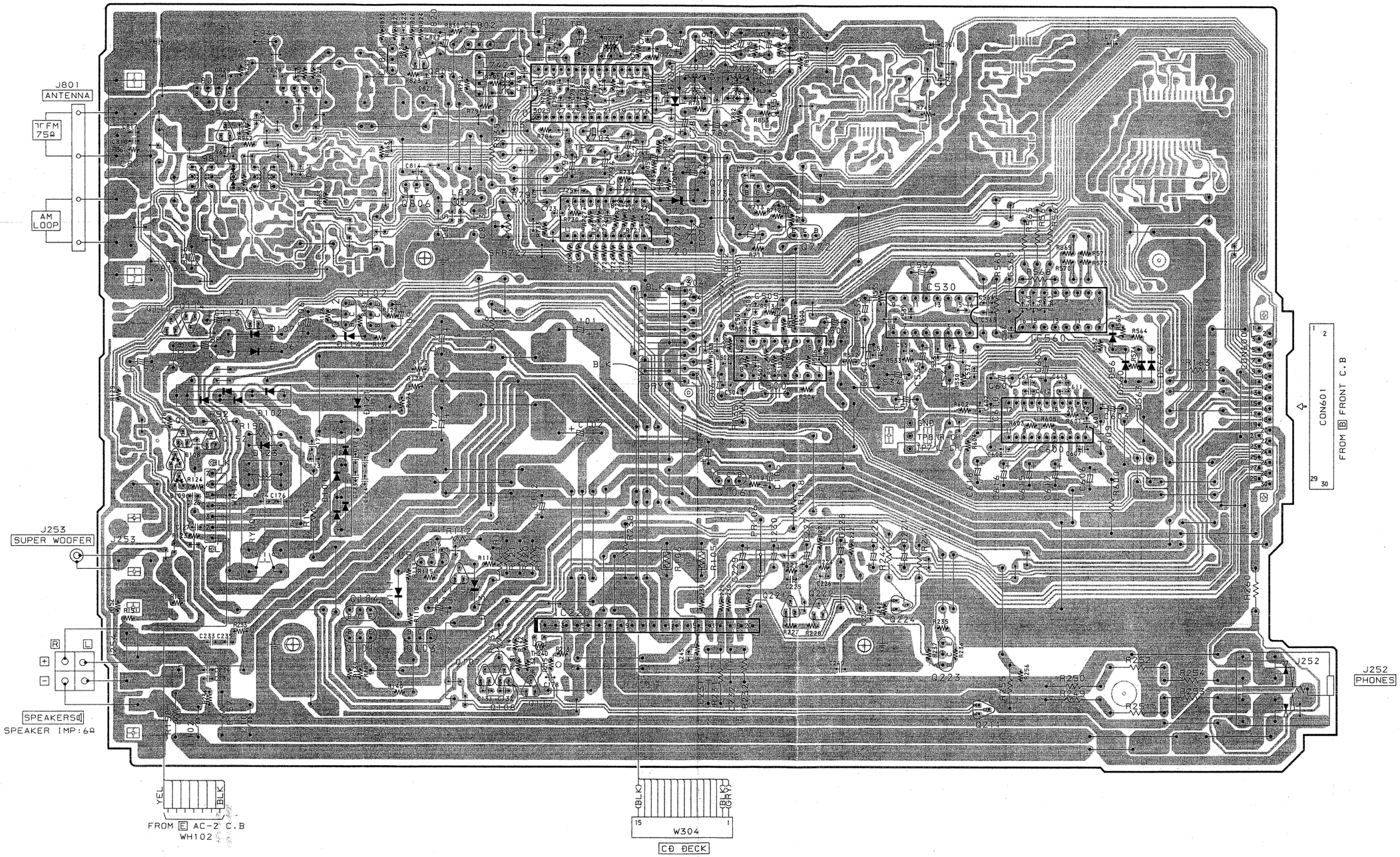
J801
ANTENNA
FM 75Ω
AM LOOP
J253
SUPER WOOFER
SPEAKERS
SPEAKER IMP:6Ω
FROM E AC-2 C.B
WH102
YEL
BLK
W304
CD DECK
CDN601
FROM B FRONT C.B
J252
PHONES
IC530
IC560
IC500
IC720

SCHEMATIC DIAGRAM-1 (MAIN)

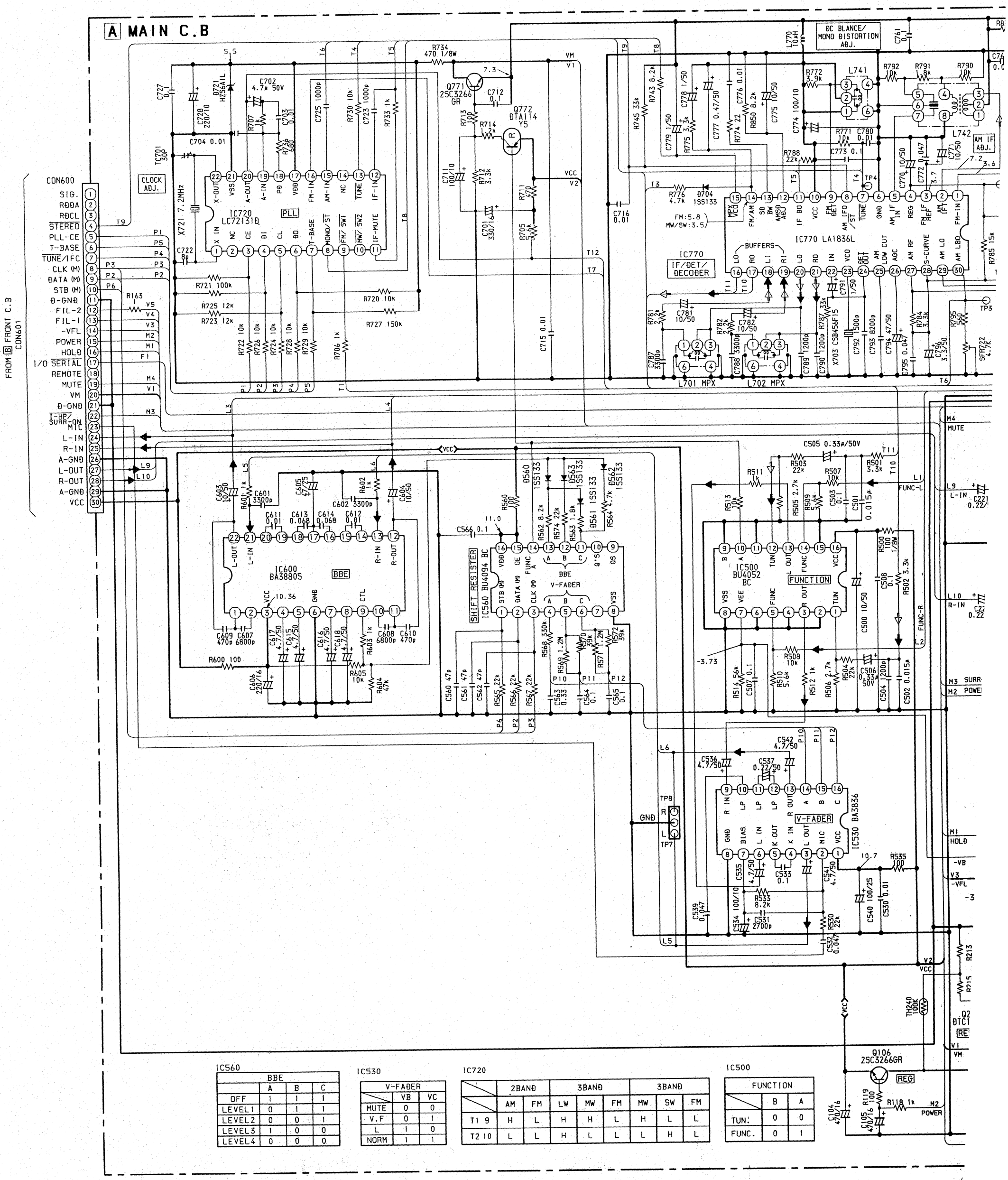

IC560

BBE			
	A	B	C
OFF	1	1	1
LEVEL1	0	1	1
LEVEL2	0	0	1
LEVEL3	1	0	0
LEVEL4	0	0	0

IC530

V-FADER		
	VB	VC
MUTE	0	0
V.F	0	1
L	1	0
NORM	1	1

IC720

	2BAND		3BAND			3BAND		
	AM	FM	LW	MW	FM	MW	SW	FM
T1 9	H	L	H	H	L	H	L	L
T2 10	L	L	H	L	L	L	H	L

IC500

FUNCTION		
	B	A
TUN.	0	0
FUNC.	0	1

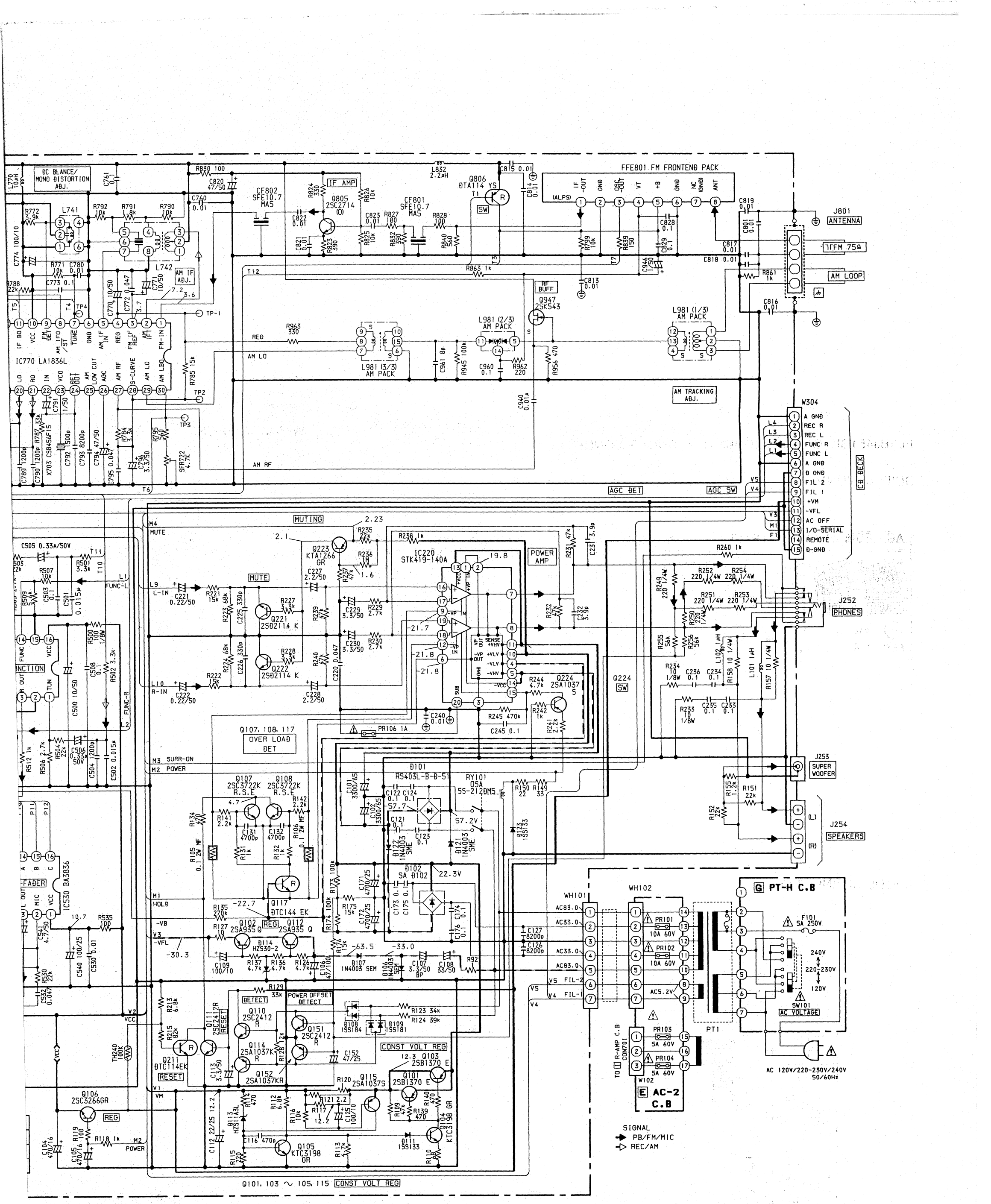
FFE801 FM FRONTEND PACK
IF -OUT
GND
OSC -OUT
VT
+B
GND
NC (GND)
ANT
(ALPS)
J801
ANTENNA
75FM 75Ω
AM LOOP
DC BLANCE/ MONO DISTORTION ADJ.
IF AMP
Q806 DTA114 YS
Q805 2SC2714 (O)
CF802 SFE10.7 MA5
CF801 SFE10.7 MA5
L832 2.2μH
L741
L742
AM IF ADJ.
IC770 LA1836L
IF BO
VCC
FM DET
AM IFO /ST
TUNE
GND
AM IF IN
REG
FM IF REF
AM IF IN
FM-IN
LO
RO
IN
VCO
DET OUT
AM LOW CUT
AGC
AM RF
S-CURVE
AM LO
AM LBO
TP1
TP2
TP3
TP4
RF BUFF
Q947 2SK543
L981 (1/3) AM PACK
L981 (2/3) AM PACK
L981 (3/3) AM PACK
REG
AM LO
AM RF
AM TRACKING ADJ.
AGC DET
AGC SW
W304
A GND
REC R
REC L
FUNC R
FUNC L
A GND
D GND
FIL 2
FIL 1
+VM
-VFL
AC OFF
I/O-SERIAL
REMOTE
D-GND
CD DECK
MUTING
MUTE
IC220 STK419-140A
POWER AMP
Q223 KTA1266 GR
Q221 2SD2114 K
Q222 2SD2114 K
Q224 2SA1037 S
Q224 SW
J252
PHONES
J253
SUPER WOOFER
J254
SPEAKERS
(L)
(R)
Q107, 108, 117 OVER LOAD DET
PR106 1A
D101 RS403L-B-D-51
RY101 DSA SS-212DM5
Q107 2SC3722K R.S.E
Q108 2SC3722K R.S.E
Q117 DTC144 EK
Q102 2SA935 Q
Q112 2SA935 Q
D114 HZS30-2
D102 SA D102
D107 1N4003 SEM
D106 1N4003 SEM
D122 1N4003 SME
D121 1N4003 SME
D123 1SS133
D108 1SS184
D109 1SS181
D111 1SS133
Q110 2SC2412 R
Q151 2SC2412 R
Q111 2SC2412R
Q114 2SA1037K R
Q152 2SA1037KR
Q115 2SA1037S
Q103 2SB1370 E
Q101 2SB1370 E
Q211 DTC114EK
Q106 2SC3266GR
Q105 KTC3198 GR
Q104 KTC3198 GR
IC530 BA3836
IC501 C5B456F15
CONST VOLT REG
POWER OFFSET DETECT
DETECT
RESET
REG
MUTE
HOLD
-VB
-VFL
VCC
VM
M1
M2
M3 SURR-ON
M4
V1
V2
V3
V4
V5
WH101
WH102
PR101 10A 60V
PR102 10A 60V
PR103 5A 60V
PR104 5A 60V
F101 5A 250V
SW101 AC VOLTAGE
240V
220-230V
120V
AC 120V/220-230V/240V 50/60Hz
PT1
G PT-H C.B
E AC-2 C.B
TO R-AMP C.B CON701
SIGNAL
PB/FM/MIC
REC/AM
Q101, 103 ~ 105, 115 CONST VOLT REG

FL (BJ451GK) GRID ASSIGNMENT ／ ANODE CONNECTION

GRID ASSIGNMENT

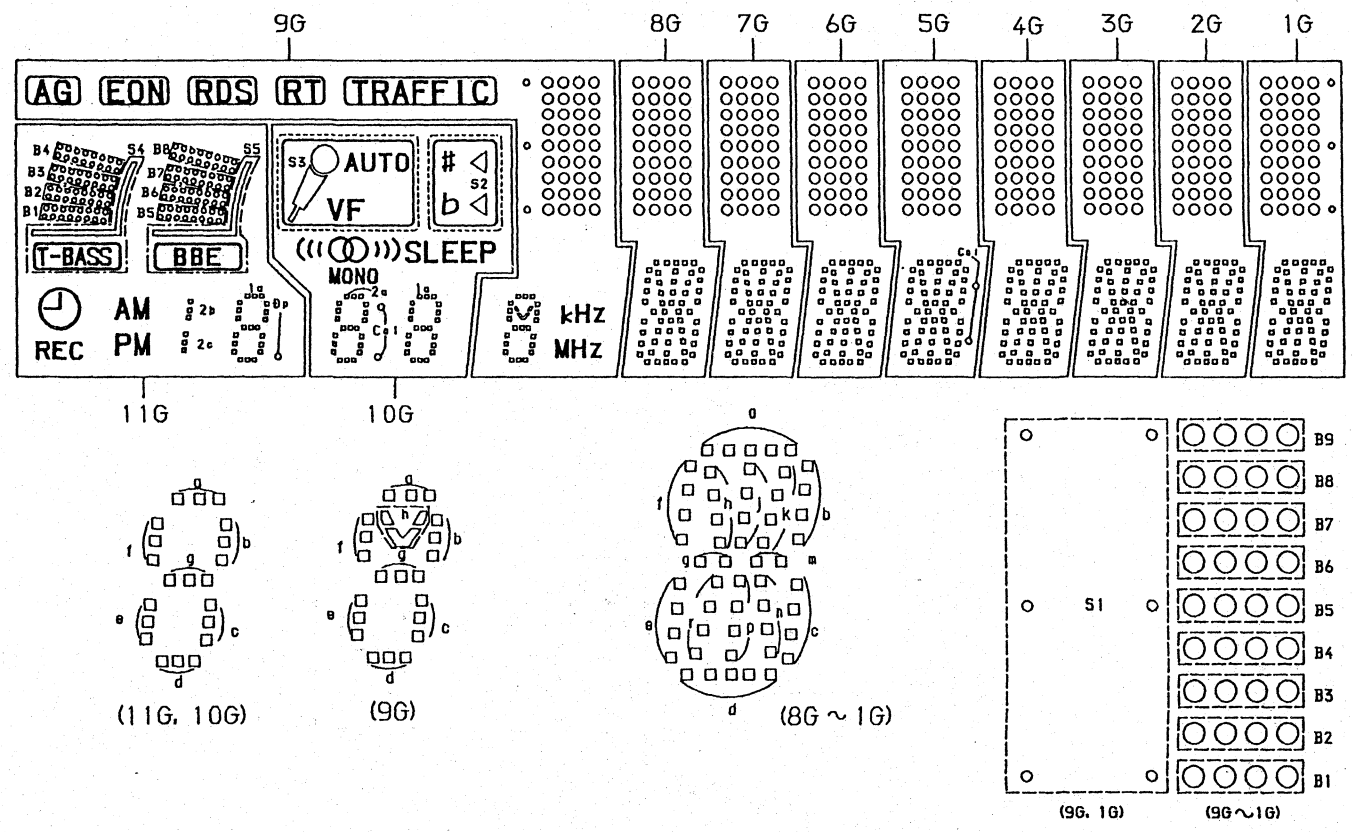

ANODE CONNECTION

	11G	10G	9G	8G	7G	6G	5G	4G	3G	2G	1G
P1	2b, 2c	S3	B9	B9	B9	B9	B9	B9	B9	B9	B9
P2	1a	AUTO	B8	B8	B8	B8	B8	B8	B8	B8	B8
P3	1b	◁(High)	B7	B7	B7	B7	B7	B7	B7	B7	B7
P4	1f	◁(Low)	B6	B6	B6	B6	B6	B6	B6	B6	B6
P5	1g	((◎))	B5	B5	B5	B5	B5	B5	B5	B5	B5
P6	1c	SLEEP	B4	B4	B4	B4	B4	B4	B4	B4	B4
P7	1e	MONO	B3	B3	B3	B3	B3	B3	B3	B3	B3
P8	1d	○	B2	B2	B2	B2	B2	B2	B2	B2	B2
P9	–	2a	B1	B1	B1	B1	B1	B1	B1	B1	B1
P10	–	2b	TRAFFIC	a	a	a	a	a	a	a	a
P11	B8	2f	RT	h	h	h	h	h	h	h	h
P12	B7	2g	RDS	j	j	j	j	j	j	j	j
P13	B6	2c	EON	k	k	k	k	k	k	k	k
P14	B5	2e	AG	b	b	b	b	b	b	b	b
P15	B4	2d	h	f	f	f	f	f	f	f	f
P16	B3	1a	a	m	m	m	m	m	m	m	m
P17	B2	1b	b	g	g	g	g	g	g	g	g
P18	B1	1f	f	c	c	c	c	c	c	c	c
P19	AM	1g	g	e	e	e	e	e	e	e	e
P20	PM	1c	c	r	r	r	r	r	r	r	r
P21	◴	1e	e	p	p	p	p	p	p	p	p
P22	REC	1d	d	n	n	n	n	n	n	n	n
P23	–	Col (Low)	KHz	d	d	d	d	d	d	d	d
P24	Dp	Col (High)	MHz	–	–	–	col	–	–	–	–
P25	–	–	S1	–	–	–	–	–	–	–	S1
P26	S4	–	–	–	–	–	–	–	–	–	–
P27	S5	–	–	–	–	–	–	–	–	–	–
P28	–	S2	–	–	–	–	–	–	–	–	–

WIRING-2 (FRONT)

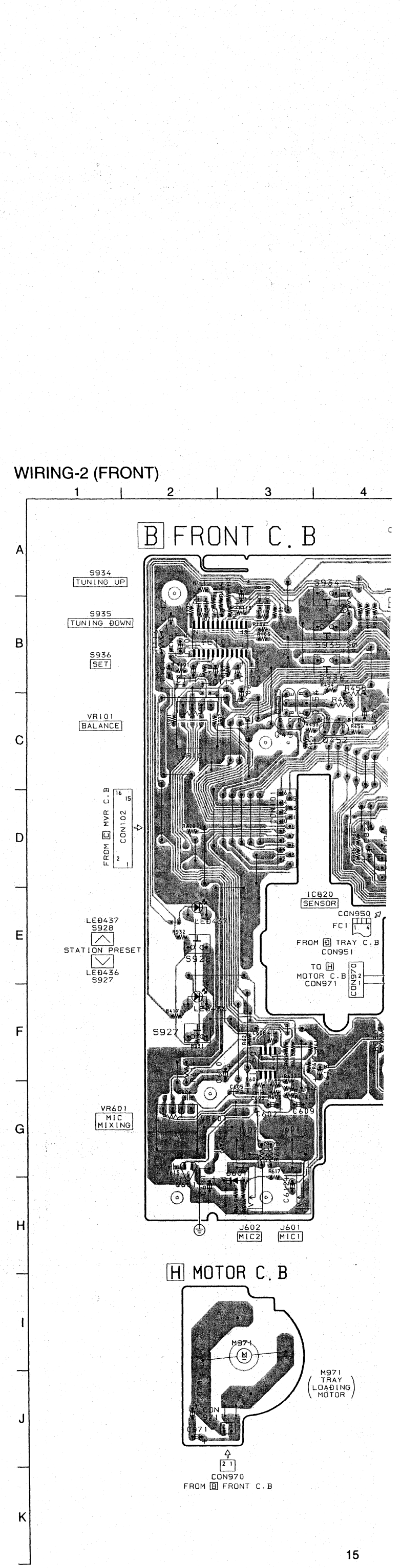

C.B

CONTROL STAGE
S932 OPEN/CLOSE
S933 TIMER
LED423 BGM
LED425 ARENA
LED424 CLASSIC
LED435 MOVIE
LED434 JAZZ
LED431 HALL
LED421 POP
LED432 LIVE
LED422 ROCK
LED433 DISCO
LED441 3CH LOGIC
LED438, 442, 443 DOLBY PRO LOGIC
LED440 PHANTOM
LED439 NORMAL
SURROUND
CON600 TO A MAIN C.B
IC820 SENSOR
CON950
FC1
FROM D TRAY C.B CON951
TO H MOTOR C.B CON971
CON970
S926 VIDEO2 /AUX
LED409, 410, 415
S945 CLOSE
S925 VIDEO1 /MD
LED407, 408, 414
S924 CD
LED405, 406, 413
S923 TUNER
LED403, 404, 412
S922 TAPE
LED401, 402, 411
S921 DEMO
S920 POWER
S955 OPEN
FC1
TO B FRONT C.B CON950
D TRAY C.B
M971 TRAY LOADING MOTOR
S946 HALL
S948 LIVE
S950 DISCO
KARAOKE VOCAL FADER /MULTIPLEX
S954
S939 JAZZ
S938 POP
S937 ROCK
S947 OFF
S949 ARENA
S951 MOVIE
S953 BBE
S952 T-BASS
S942 OFF
S941 BGM
S940 CLASSIC
FRONT SURROUND
ELECTRONIC GRAPHIC EQUALIZER

SCHEMATIC DIAGRAM-2 (FRONT)

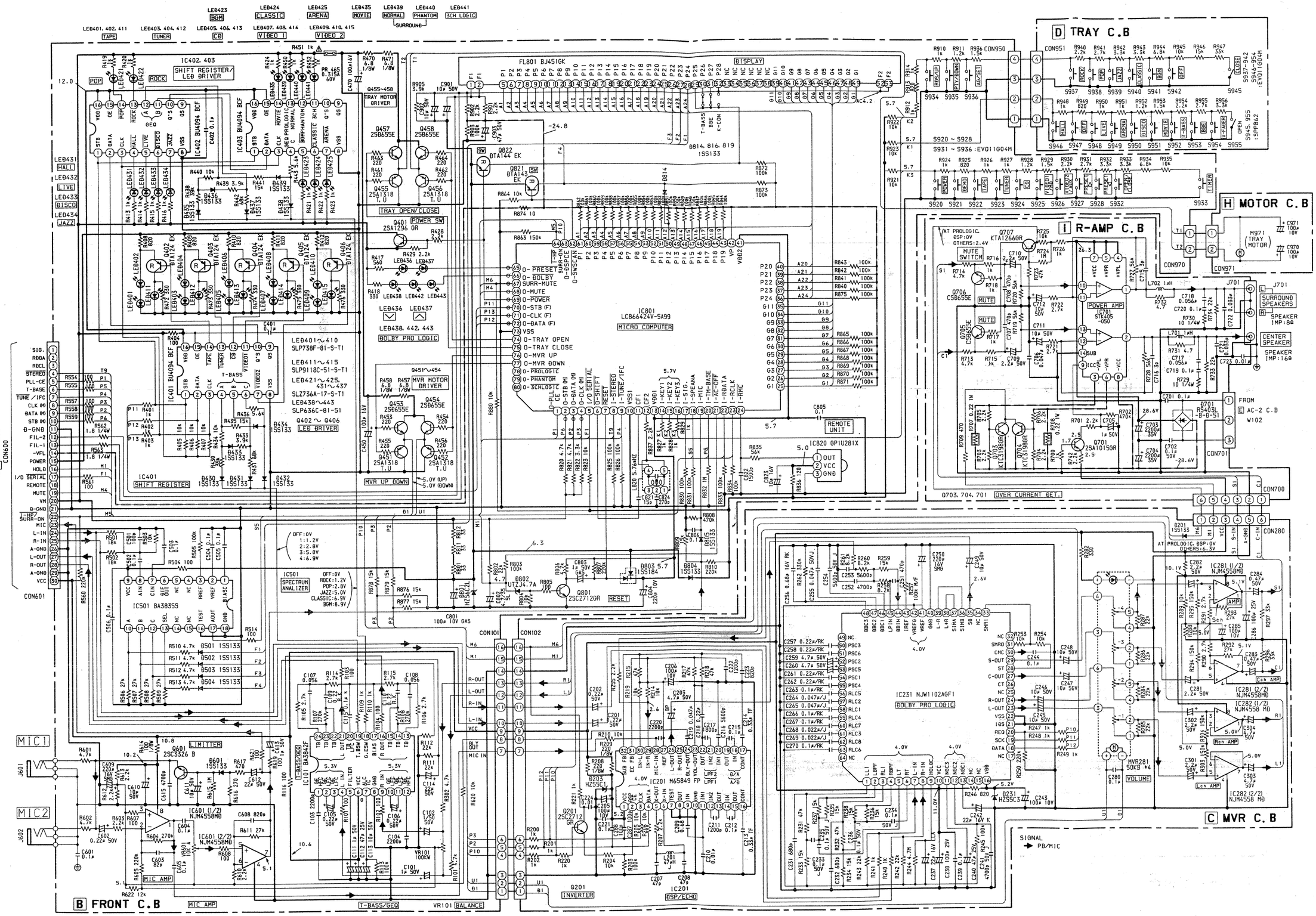
B FRONT C.B
C MVR C.B
D TRAY C.B
H MOTOR C.B
I R-AMP C.B
IC801 LC866424V-5A99 MICRO COMPUTER
IC201 M65849 FP DSP/ECHO
IC231 NJW1102AGF1 DOLBY PRO LOGIC
IC402, 403 SHIFT REGISTER/ LED DRIVER
IC401 SHIFT REGISTER
IC501 SPECTRUM ANALIZER
IC820 GP1U281X REMOTE UNIT
IC601 (1/2) NJM4558MD MIC AMP
IC601 (2/2) NJM4558MD MIC AMP
IC281 (1/2) NJM4558MD AMP
IC282 (1/2) NJM4558 MD
IC282 (2/2) NJM4558 MD
IC101 BA3842F T-BASS/GEQ
IC403 BU4094 BCF
IC402 BU4094 BCF
IC401 BU4094 BCF
Q455~458 TRAY MOTOR DRIVER
Q453,454 MVR MOTOR DRIVER
Q402 ~ Q406 LED DRIVER
Q601 2SC3326 B LIMITER
Q201 2SC2712 GR INVERTER
Q707 KTA1266GR
Q706 C5086S5E
Q705 C5086S5E
Q704 KTC3198GR
Q703 KTC3198GR
Q701 2SA1015GR
Q702 2SA1015GR
Q801 2SC2712GR RESET
Q821 DTA143 EK
Q822 DTA144 EK
Q401 2SA1296 GR POWER SW
Q451 2SA1318 T.U
Q456 2SA1318 T.U
Q457 2SB655E
Q458 2SB655E
Q453 2SB655E
Q454 2SB655E
Q451 2SA1318 T.U
Q452 2SA1318 T.U
Q703, 704, 701 OVER CURRENT DET.
FL801 BJ451GK DISPLAY
LED401~410 SLP738F-81-S-T1
LED411~415 SLP9118C-51-S-T1
LED421~425, 431~437 SLZ736A-17-S-T1
LED438~443 SLP636C-81-S1
LED401, 402, 411 TAPE
LED403, 404, 412 TUNER
LED405, 406, 413 CD
LED407, 408, 414 VIDEO 1
LED409, 410, 415 VIDEO 2
LED423 BGM
LED424 CLASSIC
LED425 ARENA
LED435 MOVIE
LED439 NORMAL
LED440 PHANTOM
LED441 3CH LOGIC
SURROUND
LED431 HALL
LED432 LIVE
LED433 DISCO
LED434 JAZZ
TRAY OPEN/CLOSE
MVR UP DOWN
DOLBY PRO LOGIC
REMOTE UNIT
MIC AMP
T-BASS/GEQ
VR101 BALANCE
DSP/ECHO
INVERTER
RESET
MIC1
MIC2
SIGNAL
PB/MIC
TO K MAIN C.B CON600
CON601
CON101
CON102
CON700
CON701
CON280
CON951
CON970
CON971
J601
J602
J701
SURROUND SPEAKERS
SPEAKER IMP:8Ω
CENTER SPEAKER
SPEAKER IMP:16Ω
FROM E AC-2 C.B W102
VOLUME
MVR281 50KB #4
OVER CURRENT DET.
OFF:0V 1:1.2V 2:2.8V 3:5.0V 4:6.9V
OFF:0V ROCK:1.2V POP:2.8V JAZZ:5.0V CLASSIC:6.9V BGM:8.9V
AT PROLOGIC DSP:0V OTHERS:2.4V
AT PROLOGIC DSP:0V OTHERS:6.3V
S920 ~ S928
S931 ~ S936 :EVQ11G04M
S937~942 S946~954 :EVQ11G04M
S945, 955 :SPPB62
T-BASS BBE K-CON
SIG. RDDA RDCL STEREO PLL-CE T-BASE TUNE/IFC CLK 09 DATA 09 STB 09 Ø-GND FIL-2 FIL-1 -VFL POWER HOLD I/O SERIAL REMOTE MUTE VM Ø-GND I-MP2 SURR-ON MIC L-IN R-IN A-GND L-OUT R-OUT A-GND VCC
O-PRESET O-DOLBY SURR-MUTE O-MUTE O-POWER O-STB (F) O-CLK (F) O-DATA (F) VSS O-TRAY OPEN O-TRAY CLOSE O-MVR UP O-MVR DOWN O-PROLOGIC O-PHANTOM O-3CHLOGIC
O-PLL CE O-STB (M) O-DATA (M) O-CLK (M) I/O SERIAL O-SHIFT RESET I-STEREO I-TUNE/IFC VSS1 CF1 CF2 VDD1 I-KEY2 I-KEY3 I-SIG. I-SPEANA I-MIC I-TM-BASE I-AC-OFF I-RBATA I-RCLK I-RMC
P20 P21 P22 P23 P24 G11 G10 G9 G8 G7 G6 G5 G4 G3 G2 G1
A20 A21 A22 A23 A24
R843 R842 R841 R840 R875 R844 R868 R869 R870 R871 100k
R845 100k
R872 R873 100k
R874 10
R863 150k
R864 10k
R880 10k
R808 470k
R809 330
R810 220k
R803 100k
R804 4.7
R805 100k
R806 100k
R807 220k
R801 33
R802 33
R812 33
R811 33
R876 15k
R877 15k
R878 15k
R879 15k
R501 18k
R502 18k
R503 1k
R504 100
R505 100k
R506 27k
R507 27k
R508 27k
R509 27k
R510 4.7k
R511 4.7k
R512 4.7k
R513 4.7k
R514 100
R550 220
R601 4.7k
R602 4.7k
R603 2.2k
R604 270k
R605 220k
R606 270k
R607 100
R608 100
R609 2.2k
R610 2.2k
R611 27k
R612 22k
R613 1k
R614 10k
R615 1M
R616 270
R617 2.2k
R618 2.2k
R619 2.2k
R620 10k
R621 100
R622 12k
R623 100
R624 100
R625 100
R626 100
R627 100
R628 100
R629 100
R630 100
R631 100
R632 100
R633 100
R634 100
R635 100
R636 100
R637 100
R638 100
R639 100
R640 100
R641 100
R642 100
R643 100
R644 100
R645 100
R646 100
R647 100
R648 100
R649 100
R650 100
R651 100
R652 100
R653 100
R654 100
R655 100
R656 100
R657 100
R658 100
R659 100
R660 100
R661 100
R662 100
R663 100
R664 100
R665 100
R666 100
R667 100
R668 100
R669 100
R670 100
R671 100
R672 100
R673 100
R674 100
R675 100
R676 100
R677 100
R678 100
R679 100
R680 100
R681 100
R682 100
R683 100
R684 100
R685 100
R686 100
R687 100
R688 100
R689 100
R690 100
R691 100
R692 100
R693 100
R694 100
R695 100
R696 100
R697 100
R698 100
R699 100
R700 100
R701 2.2k
R702 470k
R703 2.2k
R704 2.2k
R705 2.2k
R706 2.2k
R707 470
R708 2.2k
R709 470
R710 2.2k
R711 2.2k
R712 2.2k
R713 2.2k
R714 4.7k
R715 4.7k
R716 2.2k
R717 1k
R718 1k
R719 56k
R720 56k
R721 2.7
R722 2.7k
R723 47k
R724 1M
R725 10k
R726 1k
R727 56k
R728 56k
R729 10
R730 10
R731 4.7
R732 4.7
R733 56k
R734 22k
R735 0.033
R736 120
R737 1k
R738 15k
R739 5.6k
R740 10k
R741 1k
R742 2.2k
R743 5.6k
R744 10k
R745 1k
R746 820
R747 1k
R748 1k
R749 1k
R750 220k
R751 47k
R752 4.7
R753 10k
R754 10k
R755 3k
R756 3k
R757 15k
R758 8.2k
R759 15k
R760 8.2k
R761 8.2k
R762 330k
R763 330
R764 330
R765 330
R766 330
R767 330
R768 330
R769 330
R770 6.8 1/8W
R771 6.8 1/8W
R772 6.8 1/8W
R773 6.8 1/8W
R774 6.8 1/8W
R775 6.8 1/8W
R776 6.8 1/8W
R777 6.8 1/8W
R778 6.8 1/8W
R779 6.8 1/8W
R780 6.8 1/8W
R781 6.8 1/8W
R782 6.8 1/8W
R783 6.8 1/8W
R784 6.8 1/8W
R785 6.8 1/8W
R786 6.8 1/8W
R787 6.8 1/8W
R788 6.8 1/8W
R789 6.8 1/8W
R790 6.8 1/8W
R791 6.8 1/8W
R792 6.8 1/8W
R793 6.8 1/8W
R794 6.8 1/8W
R795 6.8 1/8W
R796 6.8 1/8W
R797 6.8 1/8W
R798 6.8 1/8W
R799 6.8 1/8W
R800 6.8 1/8W
R801 6.8 1/8W
R802 6.8 1/8W
R803 6.8 1/8W
R804 6.8 1/8W
R805 6.8 1/8W
R806 6.8 1/8W
R807 6.8 1/8W
R808 6.8 1/8W
R809 6.8 1/8W
R810 6.8 1/8W
R811 6.8 1/8W
R812 6.8 1/8W
R813 6.8 1/8W
R814 6.8 1/8W
R815 6.8 1/8W
R816 6.8 1/8W
R817 6.8 1/8W
R818 6.8 1/8W
R819 6.8 1/8W
R820 6.8 1/8W
R821 6.8 1/8W
R822 6.8 1/8W
R823 6.8 1/8W
R824 6.8 1/8W
R825 6.8 1/8W
R826 6.8 1/8W
R827 6.8 1/8W
R828 6.8 1/8W
R829 6.8 1/8W
R830 6.8 1/8W
R831 6.8 1/8W
R832 6.8 1/8W
R833 6.8 1/8W
R834 6.8 1/8W
R835 6.8 1/8W
R836 6.8 1/8W
R837 6.8 1/8W
R838 6.8 1/8W
R839 6.8 1/8W
R840 6.8 1/8W
R841 6.8 1/8W
R842 6.8 1/8W
R843 6.8 1/8W
R844 6.8 1/8W
R845 6.8 1/8W
R846 6.8 1/8W
R847 6.8 1/8W
R848 6.8 1/8W
R849 6.8 1/8W
R850 6.8 1/8W
R851 6.8 1/8W
R852 6.8 1/8W
R853 6.8 1/8W
R854 6.8 1/8W
R855 6.8 1/8W
R856 6.8 1/8W
R857 6.8 1/8W
R858 6.8 1/8W
R859 6.8 1/8W
R860 6.8 1/8W
R861 6.8 1/8W
R862 6.8 1/8W
R863 6.8 1/8W
R864 6.8 1/8W
R865 6.8 1/8W
R866 6.8 1/8W
R867 6.8 1/8W
R868 6.8 1/8W
R869 6.8 1/8W
R870 6.8 1/8W
R871 6.8 1/8W
R872 6.8 1/8W
R873 6.8 1/8W
R874 6.8 1/8W
R875 6.8 1/8W
R876 6.8 1/8W
R877 6.8 1/8W
R878 6.8 1/8W
R879 6.8 1/8W
R880 6.8 1/8W
R881 6.8 1/8W
R882 6.8 1/8W
R883 6.8 1/8W
R884 6.8 1/8W
R885 6.8 1/8W
R886 6.8 1/8W
R887 6.8 1/8W
R888 6.8 1/8W
R889 6.8 1/8W
R890 6.8 1/8W
R891 6.8 1/8W
R892 6.8 1/8W
R893 6.8 1/8W
R894 6.8 1/8W
R895 6.8 1/8W
R896 6.8 1/8W
R897 6.8 1/8W
R898 6.8 1/8W
R899 6.8 1/8W
R900 6.8 1/8W
R901 6.8 1/8W
R902 6.8 1/8W
R903 6.8 1/8W
R904 6.8 1/8W
R905 6.8 1/8W
R906 6.8 1/8W
R907 6.8 1/8W
R908 6.8 1/8W
R909 6.8 1/8W
R910 6.8 1/8W
R911 6.8 1/8W
R912 6.8 1/8W
R913 6.8 1/8W
R914 6.8 1/8W
R915 6.8 1/8W
R916 6.8 1/8W
R917 6.8 1/8W
R918 6.8 1/8W
R919 6.8 1/8W
R920 6.8 1/8W
R921 6.8 1/8W
R922 6.8 1/8W
R923 6.8 1/8W
R924 6.8 1/8W
R925 6.8 1/8W
R926 6.8 1/8W
R927 6.8 1/8W
R928 6.8 1/8W
R929 6.8 1/8W
R930 6.8 1/8W
R931 6.8 1/8W
R932 6.8 1/8W
R933 6.8 1/8W
R934 6.8 1/8W
R935 6.8 1/8W
C401 0.1µ
C402 0.1µ
C403 0.1µ
C404 0.1µ
C405 0.1µ
C406 0.1µ
C407 0.1µ
C408 0.1µ
C409 0.1µ
C410 0.1µ
C411 0.1µ
C412 0.1µ
C413 0.1µ
C414 0.1µ
C415 0.1µ
C416 0.1µ
C417 0.1µ
C418 0.1µ
C419 0.1µ
C420 0.1µ
C421 0.1µ
C422 0.1µ
C423 0.1µ
C424 0.1µ
C425 0.1µ
C426 0.1µ
C427 0.1µ
C428 0.1µ
C429 0.1µ
C430 0.1µ
C431 0.1µ
C432 0.1µ
C433 0.1µ
C434 0.1µ
C435 0.1µ
C436 0.1µ
C437 0.1µ
C438 0.1µ
C439 0.1µ
C440 0.1µ
C441 0.1µ
C442 0.1µ
C443 0.1µ
C444 0.1µ
C445 0.1µ
C446 0.1µ
C447 0.1µ
C448 0.1µ
C449 0.1µ
C450 0.1µ
C451 0.1µ
C452 0.1µ
C453 0.1µ
C454 0.1µ
C455 0.1µ
C456 0.1µ
C457 0.1µ
C458 0.1µ
C459 0.1µ
C460 0.1µ
C461 0.1µ
C462 0.1µ
C463 0.1µ
C464 0.1µ
C465 0.1µ
C466 0.1µ
C467 0.1µ
C468 0.1µ
C469 0.1µ
C470 100µ 16V
C471 0.1µ
C472 0.1µ
C473 0.1µ
C474 0.1µ
C475 0.1µ
C476 0.1µ
C477 0.1µ
C478 0.1µ
C479 0.1µ
C480 0.1µ
C481 0.1µ
C482 0.1µ
C483 0.1µ
C484 0.1µ
C485 0.1µ
C486 0.1µ
C487 0.1µ
C488 0.1µ
C489 0.1µ
C490 0.1µ
C491 0.1µ
C492 0.1µ
C493 0.1µ
C494 0.1µ
C495 0.1µ
C496 0.1µ
C497 0.1µ
C498 0.1µ
C499 0.1µ
C500 0.1µ
C501 0.1µ
C502 0.1µ
C503 0.1µ
C504 0.1µ
C505 0.1µ
C506 0.1µ
C507 0.1µ
C508 0.1µ
C509 0.1µ
C510 0.1µ
C511 0.1µ
C512 0.1µ
C513 0.1µ
C514 0.1µ
C515 0.1µ
C516 0.1µ
C517 0.1µ
C518 0.1µ
C519 0.1µ
C520 0.1µ
C521 0.1µ
C522 0.1µ
C523 0.1µ
C524 0.1µ
C525 0.1µ
C526 0.1µ
C527 0.1µ
C528 0.1µ
C529 0.1µ
C530 0.1µ
C531 0.1µ
C532 0.1µ
C533 0.1µ
C534 0.1µ
C535 0.1µ
C536 0.1µ
C537 0.1µ
C538 0.1µ
C539 0.1µ
C540 0.1µ
C541 0.1µ
C542 0.1µ
C543 0.1µ
C544 0.1µ
C545 0.1µ
C546 0.1µ
C547 0.1µ
C548 0.1µ
C549 0.1µ
C550 0.1µ
C551 0.1µ
C552 0.1µ
C553 0.1µ
C554 0.1µ
C555 0.1µ
C556 0.1µ
C557 0.1µ
C558 0.1µ
C559 0.1µ
C560 0.1µ
C561 0.1µ
C562 0.1µ
C563 0.1µ
C564 0.1µ
C565 0.1µ
C566 0.1µ
C567 0.1µ
C568 0.1µ
C569 0.1µ
C570 0.1µ
C571 0.1µ
C572 0.1µ
C573 0.1µ
C574 0.1µ
C575 0.1µ
C576 0.1µ
C577 0.1µ
C578 0.1µ
C579 0.1µ
C580 0.1µ
C581 0.1µ
C582 0.1µ
C583 0.1µ
C584 0.1µ
C585 0.1µ
C586 0.1µ
C587 0.1µ
C588 0.1µ
C589 0.1µ
C590 0.1µ
C591 0.1µ
C592 0.1µ
C593 0.1µ
C594 0.1µ
C595 0.1µ
C596 0.1µ
C597 0.1µ
C598 0.1µ
C599 0.1µ
C600 0.1µ
C601 0.1µ
C602 0.22µ 50V
C603 82p
C604 220µ 10V
C605 0.1
C606 0.22µ 50V
C607 0.1µ
C608 820p
C609 220µ 50V
C610 10µ 50V
C611 1µ 50V
C612 22µ 50V
C613 47µ 25V
C614 1µ 50V
C615 4700p
C616 0.1µ
C617 0.1µ
C618 0.1µ
C619 0.1µ
C620 0.1µ
C621 0.1µ
C622 0.1µ
C623 0.1µ
C624 0.1µ
C625 0.1µ
C626 0.1µ
C627 0.1µ
C628 0.1µ
C629 0.1µ
C630 0.1µ
C631 0.1µ
C632 0.1µ
C633 0.1µ
C634 0.1µ
C635 0.1µ
C636 0.1µ
C637 0.1µ
C638 0.1µ
C639 0.1µ
C640 0.1µ
C641 0.1µ
C642 0.1µ
C643 0.1µ
C644 0.1µ
C645 0.1µ
C646 0.1µ
C647 0.1µ
C648 0.1µ
C649 0.1µ
C650 0.1µ
C651 0.1µ
C652 0.1µ
C653 0.1µ
C654 0.1µ
C655 0.1µ
C656 0.1µ
C657 0.1µ
C658 0.1µ
C659 0.1µ
C660 0.1µ
C661 0.1µ
C662 0.1µ
C663 0.1µ
C664 0.1µ
C665 0.1µ
C666 0.1µ
C667 0.1µ
C668 0.1µ
C669 0.1µ
C670 0.1µ
C671 0.1µ
C672 0.1µ
C673 0.1µ
C674 0.1µ
C675 0.1µ
C676 0.1µ
C677 0.1µ
C678 0.1µ
C679 0.1µ
C680 0.1µ
C681 0.1µ
C682 0.1µ
C683 0.1µ
C684 0.1µ
C685 0.1µ
C686 0.1µ
C687 0.1µ
C688 0.1µ
C689 0.1µ
C690 0.1µ
C691 0.1µ
C692 0.1µ
C693 0.1µ
C694 0.1µ
C695 0.1µ
C696 0.1µ
C697 0.1µ
C698 0.1µ
C699 0.1µ
C700 0.1µ
C701 0.1µ
C702 2200µ 50V
C703 2200µ 35V
C704 2200µ 50V
C705 1µ 50V
C706 0.0047µ
C707 470p
C708 470p
C709 0.056µ
C710 1µ 50V
C711 10µ 50V
C712 50V
C713 0.1µ
C714 0.1µ
C715 5p
C716 5p
C717 0.056µ
C718 0.056µ
C719 0.1µ
C720 0.1µ
C721 0.1µ
C722 0.035µ
C723 0.01µ
C724 0.1µ
C725 0.1µ
C726 0.1µ
C727 0.1µ
C728 0.1µ
C729 0.1µ
C730 0.1µ
C731 0.1µ
C732 0.1µ
C733 0.1µ
C734 0.1µ
C735 0.1µ
C736 0.1µ
C737 0.1µ
C738 0.1µ
C739 0.1µ
C740 0.1µ
C741 0.1µ
C742 0.1µ
C743 0.1µ
C744 0.1µ
C745 0.1µ
C746 0.1µ
C747 0.1µ
C748 0.1µ
C749 0.1µ
C750 0.1µ
C751 0.1µ
C752 0.1µ
C753 0.1µ
C754 0.1µ
C755 0.1µ
C756 0.1µ
C757 0.1µ
C758 0.1µ
C759 0.1µ
C760 0.1µ
C761 0.1µ
C762 0.1µ
C763 0.1µ
C764 0.1µ
C765 0.1µ
C766 0.1µ
C767 0.1µ
C768 0.1µ
C769 0.1µ
C770 0.1µ
C771 0.1µ
C772 0.1µ
C773 0.1µ
C774 0.1µ
C775 0.1µ
C776 0.1µ
C777 0.1µ
C778 0.1µ
C779 0.1µ
C780 0.1µ
C781 0.1µ
C782 0.1µ
C783 0.1µ
C784 0.1µ
C785 0.1µ
C786 0.1µ
C787 0.1µ
C788 0.1µ
C789 0.1µ
C790 0.1µ
C791 0.1µ
C792 0.1µ
C793 0.1µ
C794 0.1µ
C795 0.1µ
C796 0.1µ
C797 0.1µ
C798 0.1µ
C799 0.1µ
C800 0.1µ
C801 0.1µ
C802 0.1µ
C803 0.1µ
C804 0.1µ
C805 0.1µ
C806 0.1µ
C807 0.1µ
C808 0.1µ
C809 0.1µ
C810 0.1µ
C811 0.1µ
C812 0.1µ
C813 0.1µ
C814 0.1µ
C815 0.1µ
C816 0.1µ
C817 0.1µ
C818 0.1µ
C819 0.1µ
C820 0.1µ
C821 0.1µ
C822 0.1µ
C823 0.1µ
C824 0.1µ
C825 0.1µ
C826 0.1µ
C827 0.1µ
C828 0.1µ
C829 0.1µ
C830 0.1µ
C831 0.1µ
C832 0.1µ
C833 0.1µ
C834 0.1µ
C835 0.1µ
C836 0.1µ
C837 0.1µ
C838 0.1µ
C839 0.1µ
C840 0.1µ
C841 0.1µ
C842 0.1µ
C843 0.1µ
C844 0.1µ
C845 0.1µ
C846 0.1µ
C847 0.1µ
C848 0.1µ
C849 0.1µ
C850 0.1µ
C851 0.1µ
C852 0.1µ
C853 0.1µ
C854 0.1µ
C855 0.1µ
C856 0.1µ
C857 0.1µ
C858 0.1µ
C859 0.1µ
C860 0.1µ
C861 0.1µ
C862 0.1µ
C863 0.1µ
C864 0.1µ
C865 0.1µ
C866 0.1µ
C867 0.1µ
C868 0.1µ
C869 0.1µ
C870 0.1µ
C871 0.1µ
C872 0.1µ
C873 0.1µ
C874 0.1µ
C875 0.1µ
C876 0.1µ
C877 0.1µ
C878 0.1µ
C879 0.1µ
C880 0.1µ
C881 0.1µ
C882 0.1µ
C883 0.1µ
C884 0.1µ
C885 0.1µ
C886 0.1µ
C887 0.1µ
C888 0.1µ
C889 0.1µ
C890 0.1µ
C891 0.1µ
C892 0.1µ
C893 0.1µ
C894 0.1µ
C895 0.1µ
C896 0.1µ
C897 0.1µ
C898 0.1µ
C899 0.1µ
C900 0.1µ
C901 10µ 50V
C902 0.1µ
C903 47µ 50V
C904 0.1µ
C905 0.1µ
C906 0.1µ
C907 0.1µ
C908 0.1µ
C909 0.1µ
C910 0.1µ
C911 0.1µ
C912 0.1µ
C913 0.1µ
C914 0.1µ
C915 0.1µ
C916 0.1µ
C917 0.1µ
C918 0.1µ
C919 0.1µ
C920 0.1µ
C921 0.1µ
C922 0.1µ
C923 0.1µ
C924 0.1µ
C925 0.1µ
C926 0.1µ
C927 0.1µ
C928 0.1µ
C929 0.1µ
C930 0.1µ
C931 0.1µ
C932 0.1µ
C933 0.1µ
C934 0.1µ
C935 0.1µ
C936 0.1µ
C937 0.1µ
C938 0.1µ
C939 0.1µ
C940 0.1µ
C941 0.1µ
C942 0.1µ
C943 0.1µ
C944 0.1µ
C945 0.1µ
C946 0.1µ
C947 0.1µ
C948 0.1µ
C949 0.1µ
C950 0.1µ
C951 0.1µ
C952 0.1µ
C953 0.1µ
C954 0.1µ
C955 0.1µ
C956 0.1µ
C957 0.1µ
C958 0.1µ
C959 0.1µ
C960 0.1µ
C961 0.1µ
C962 0.1µ
C963 0.1µ
C964 0.1µ
C965 0.1µ
C966 0.1µ
C967 0.1µ
C968 0.1µ
C969 0.1µ
C970 100µ 10V
C971 100µ 10V
C972 0.1µ
C973 0.1µ
C974 0.1µ
C975 0.1µ
C976 0.1µ
C977 0.1µ
C978 0.1µ
C979 0.1µ
C980 0.1µ
C981 0.1µ
C982 0.1µ
C983 0.1µ
C984 0.1µ
C985 0.1µ
C986 0.1µ
C987 0.1µ
C988 0.1µ
C989 0.1µ
C990 0.1µ
C991 0.1µ
C992 0.1µ
C993 0.1µ
C994 0.1µ
C995 0.1µ
C996 0.1µ
C997 0.1µ
C998 0.1µ
C999 0.1µ
C1000 0.1µ
C1001 0.1µ
C1002 0.1µ
C1003 0.1µ
C1004 0.1µ
C1005 0.1µ
C1006 0.1µ
C1007 0.1µ
C1008 0.1µ
C1009 0.1µ
C1010 0.1µ
C1011 0.1µ
C1012 0.1µ
C1013 0.1µ
C1014 0.1µ
C1015 0.1µ
C1016 0.1µ
C1017 0.1µ
C1018 0.1µ
C1019 0.1µ
C1020 0.1µ
C1021 0.1µ
C1022 0.1µ
C1023 0.1µ
C1024 0.1µ
C1025 0.1µ
C1026 0.1µ
C1027 0.1µ
C1028 0.1µ
C1029 0.1µ
C1030 0.1µ
C1031 0.1µ
C1032 0.1µ
C1033 0.1µ
C1034 0.1µ
C1035 0.1µ
C1036 0.1µ
C1037 0.1µ
C1038 0.1µ
C1039 0.1µ
C1040 0.1µ
C1041 0.1µ
C1042 0.1µ
C1043 0.1µ
C1044 0.1µ
C1045 0.1µ
C1046 0.1µ
C1047 0.1µ
C1048 0.1µ
C1049 0.1µ
C1050 0.1µ
C1051 0.1µ
C1052 0.1µ
C1053 0.1µ
C1054 0.1µ
C1055 0.1µ
C1056 0.1µ
C1057 0.1µ
C1058 0.1µ
C1059 0.1µ
C1060 0.1µ
C1061 0.1µ
C1062 0.1µ
C1063 0.1µ
C1064 0.1µ
C1065 0.1µ
C1066 0.1µ
C1067 0.1µ
C1068 0.1µ
C1069 0.1µ
C1070 0.1µ
C1071 0.1µ
C1072 0.1µ
C1073 0.1µ
C1074 0.1µ
C1075 0.1µ
C1076 0.1µ
C1077 0.1µ
C1078 0.1µ
C1079 0.1µ
C1080 0.1µ
C1081 0.1µ
C1082 0.1µ
C1083 0.1µ
C1084 0.1µ
C1085 0.1µ
C1086 0.1µ
C1087 0.1µ
C1088 0.1µ
C1089 0.1µ
C1090 0.1µ
C1091 0.1µ
C1092 0.1µ
C1093 0.1µ
C1094 0.1µ
C1095 0.1µ
C1096 0.1µ
C1097 0.1µ
C1098 0.1µ
C1099 0.1µ
C1100 0.1µ
C1101 0.1µ
C1102 0.1µ
C1103 0.1µ
C1104 0.1µ
C1105 0.1µ
C1106 0.1µ
C1107 0.1µ
C1108 0.1µ
C1109 0.1µ
C1110 0.1µ
C1111 0.1µ
C1112 0.1µ
C1113 0.1µ
C1114 0.1µ
C1115 0.1µ
C1116 0.1µ
C1117 0.1µ
C1118 0.1µ
C1119 0.1µ
C1120 0.1µ
C1121 0.1µ
C1122 0.1µ
C1123 0.1µ
C1124 0.1µ
C1125 0.1µ
C1126 0.1µ
C1127 0.1µ
C1128 0.1µ
C1129 0.1µ
C1130 0.1µ
C1131 0.1µ
C1132 0.1µ
C1133 0.1µ
C1134 0.1µ
C1135 0.1µ
C1136 0.1µ
C1137 0.1µ
C1138 0.1µ
C1139 0.1µ
C1140 0.1µ
C1141 0.1µ
C1142 0.1µ
C1143 0.1µ
C1144 0.1µ
C1145 0.1µ
C1146 0.1µ
C1147 0.1µ
C1148 0.1µ
C1149 0.1µ
C1150 0.1µ
C1151 0.1µ
C1152 0.1µ
C1153 0.1µ
C1154 0.1µ
C1155 0.1µ
C1156 0.1µ
C1157 0.1µ
C1158 0.1µ
C1159 0.1µ
C1160 0.1µ
C1161 0.1µ
C1162 0.1µ
C1163 0.1µ
C1164 0.1µ
C1165 0.1µ
C1166 0.1µ
C1167 0.1µ
C1168 0.1µ
C1169 0.1µ
C1170 0.1µ
C1171 0.1µ
C1172 0.1µ
C1173 0.1µ
C1174 0.1µ
C1175 0.1µ
C1176 0.1µ
C1177 0.1µ
C1178 0.1µ
C1179 0.1µ
C1180 0.1µ
C1181 0.1µ
C1182 0.1µ
C1183 0.1µ
C1184 0.1µ
C1185 0.1µ
C1186 0.1µ
C1187 0.1µ
C1188 0.1µ
C1189 0.1µ
C1190 0.1µ
C1191 0.1µ
C1192 0.1µ
C1193 0.1µ
C1194 0.1µ
C1195 0.1µ
C1196 0.1µ
C1197 0.1µ
C1198 0.1µ
C1199 0.1µ
C1200 0.1µ
C1201 0.1µ
C1202 0.1µ
C1203 0.1µ
C1204 0.1µ
C1205 0.1µ
C1206 0.1µ
C1207 0.1µ
C1208 0.1µ
C1209 0.1µ
C1210 0.1µ
C1211 0.1µ
C1212 0.1µ
C1213 0.1µ
C1214 0.1µ
C1215 0.1µ
C1216 0.1µ
C1217 0.1µ
C1218 0.1µ
C1219 0.1µ
C1220 0.1µ
C1221 0.1µ
C1222 0.1µ
C1223 0.1µ
C1224 0.1µ
C1225 0.1µ
C1226 0.1µ
C1227 0.1µ
C1228 0.1µ
C1229 0.1µ
C1230 0.1µ
C1231 0.1µ
C1232 0.1µ
C1233 0.1µ
C1234 0.1µ
C1235 0.1µ
C1236 0.1µ
C1237 0.1µ
C1238 0.1µ
C1239 0.1µ
C1240 0.1µ
C1241 0.1µ
C1242 0.1µ
C1243 0.1µ
C1244 0.1µ
C1245 0.1µ
C1246 0.1µ
C1247 0.1µ
C1248 0.1µ
C1249 0.1µ
C1250 0.1µ
C1251 0.1µ
C1252 0.1µ
C1253 0.1µ
C1254 0.1µ
C1255 0.1µ
C1256 0.1µ
C1257 0.1µ
C1258 0.1µ
C1259 0.1µ
C1260 0.1µ
C1261 0.1µ
C1262 0.1µ
C1263 0.1µ
C1264 0.1µ
C1265 0.1µ
C1266 0.1µ
C1267 0.1µ
C1268 0.1µ
C1269 0.1µ
C1270 0.1µ
C1271 0.1µ
C1272 0.1µ
C1273 0.1µ
C1274 0.1µ
C1275 0.1µ
C1276 0.1µ
C1277 0.1µ
C1278 0.1µ
C1279 0.1µ
C1280 0.1µ
C1281 0.1µ
C1282 0.1µ
C1283 0.1µ
C1284 0.1µ
C1285 0.1µ
C1286 0.1µ
C1287 0.1µ
C1288 0.1µ
C1289 0.1µ
C1290 0.1µ
C1291 0.1µ
C1292 0.1µ
C1293 0.1µ
C1294 0.1µ
C1295 0.1µ
C1296 0.1µ
C1297 0.1µ
C1298 0.1µ
C1299 0.1µ
C1300 0.1µ
C1301 0.1µ
C1302 0.1µ
C1303 0.1µ
C1304 0.1µ
C1305 0.1µ
C1306 0.1µ
C1307 0.1µ
C1308 0.1µ
C1309 0.1µ
C1310 0.1µ
C1311 0.1µ
C1312 0.1µ
C1313 0.1µ
C1314 0.1µ
C1315 0.1µ
C1316 0.1µ
C1317 0.1µ
C1318 0.1µ
C1319 0.1µ
C1320 0.1µ
C1321 0.1µ
C1322 0.1µ
C1323 0.1µ
C1324 0.1µ
C1325 0.1µ
C1326 0.1µ
C1327 0.1µ
C1328 0.1µ
C1329 0.1µ
C1330 0.1µ
C1331 0.1µ
C1332 0.1µ
C1333 0.1µ
C1334 0.1µ
C1335 0.1µ
C1336 0.1µ
C1337 0.1µ
C1338 0.1µ
C1339 0.1µ
C1340 0.1µ
C1341 0.1µ
C1342 0.1µ
C1343 0.1µ
C1344 0.1µ
C1345 0.1µ
C1346 0.1µ
C1347 0.1µ
C1348 0.1µ
C1349 0.1µ
C1350 0.1µ
C1351 0.1µ
C1352 0.1µ
C1353 0.1µ
C1354 0.1µ
C1355 0.1µ
C1356 0.1µ
C1357 0.1µ
C1358 0.1µ
C1359 0.1µ
C1360 0.1µ
C1361 0.1µ
C1362 0.1µ
C1363 0.1µ
C1364 0.1µ
C1365 0.1µ
C1366 0.1µ
C1367 0.1µ
C1368 0.1µ
C1369 0.1µ
C1370 0.1µ
C1371 0.1µ
C1372 0.1µ
C1373 0.1µ
C1374 0.1µ
C1375 0.1µ
C1376 0.1µ
C1377 0.1µ
C1378 0.1µ
C1379 0.1µ
C1380 0.1µ
C1381 0.1µ
C1382 0.1µ
C1383 0.1µ
C1384 0.1µ
C1385 0.1µ
C1386 0.1µ
C1387 0.1µ
C1388 0.1µ
C1389 0.1µ
C1390 0.1µ
C1391 0.1µ
C1392 0.1µ
C1393 0.1µ
C1394 0.1µ
C1395 0.1µ
C1396 0.1µ
C1397 0.1µ
C1398 0.1µ
C1399 0.1µ
C1400 0.1µ
C1401 0.1µ
C1402 0.1µ
C1403 0.1µ
C1404 0.1µ
C1405 0.1µ
C1406 0.1µ
C1407 0.1µ
C1408 0.1µ
C1409 0.1µ
C1410 0.1µ
C1411 0.1µ
C1412 0.1µ
C1413 0.1µ
C1414 0.1µ
C1415 0.1µ
C1416 0.1µ
C1417 0.1µ
C1418 0.1µ
C1419 0.1µ
C1420 0.1µ
C1421 0.1µ
C1422 0.1µ
C1423 0.1µ
C1424 0.1µ
C1425 0.1µ
C1426 0.1µ
C1427 0.1µ
C1428 0.1µ
C1429 0.1µ
C1430 0.1µ
C1431 0.1µ
C1432 0.1µ
C1433 0.1µ
C1434 0.1µ
C1435 0.1µ
C1436 0.1µ
C1437 0.1µ
C1438 0.1µ
C1439 0.1µ
C1440 0.1µ
C1441 0.1µ
C1442 0.1µ
C1443 0.1µ
C1444 0.1µ
C1445 0.1µ
C1446 0.1µ
C1447 0.1µ
C1448 0.1µ
C1449 0.1µ
C1450 0.1µ
C1451 0.1µ
C1452 0.1µ
C1453 0.1µ
C1454 0.1µ
C1455 0.1µ
C1456 0.1µ
C1457 0.1µ
C1458 0.1µ
C1459 0.1µ
C1460 0.1µ
C1461 0.1µ
C1462 0.1µ
C1463 0.1µ
C1464 0.1µ
C1465 0.1µ
C1466 0.1µ
C1467 0.1µ
C1468 0.1µ
C1469 0.1µ
C1470 0.1µ
C1471 0.1µ
C1472 0.1µ
C1473 0.1µ
C1474 0.1µ
C1475 0.1µ
C1476 0.1µ
C1477 0.1µ
C1478 0.1µ
C1479 0.1µ
C1480 0.1µ
C1481 0.1µ
C1482 0.1µ
C1483 0.1µ
C1484 0.1µ
C1485 0.1µ
C1486 0.1µ
C1487 0.1µ
C1488 0.1µ
C1489 0.1µ
C1490 0.1µ
C1491 0.1µ
C1492 0.1µ
C1493 0.1µ
C1494 0.1µ
C1495 0.1µ
C1496 0.1µ
C1497 0.1µ
C1498 0.1µ
C1499 0.1µ
C1500 0.1µ
C1501 0.1µ
C1502 0.1µ
C1503 0.1µ
C1504 0.1µ
C1505 0.1µ
C1506 0.1µ
C1507 0.1µ
C1508 0.1µ
C1509 0.1µ
C1510 0.1µ
C1511 0.1µ
C1512 0.1µ
C1513 0.1µ
C1514 0.1µ
C1515 0.1µ
C1516 0.1µ
C1517 0.1µ
C1518 0.1µ
C1519 0.1µ
C1520 0.1µ
C1521 0.1µ
C1522 0.1µ
C1523 0.1µ
C1524 0.1µ
C1525 0.1µ
C1526 0.1µ
C1527 0.1µ
C1528 0.1µ
C1529 0.1µ
C1530 0.1µ

C MVR C.B

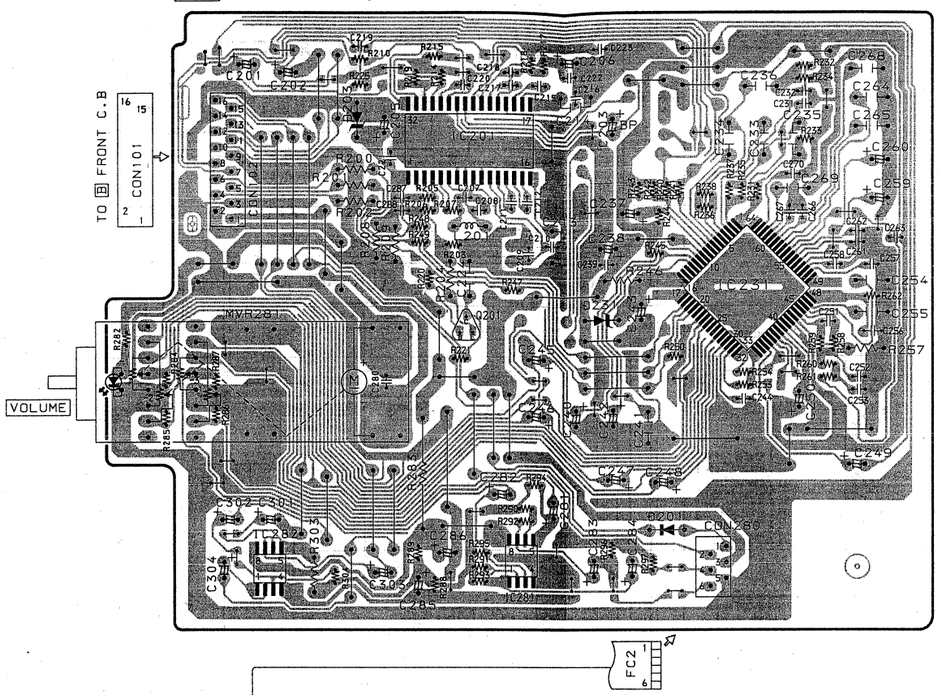

G PT-H C.B

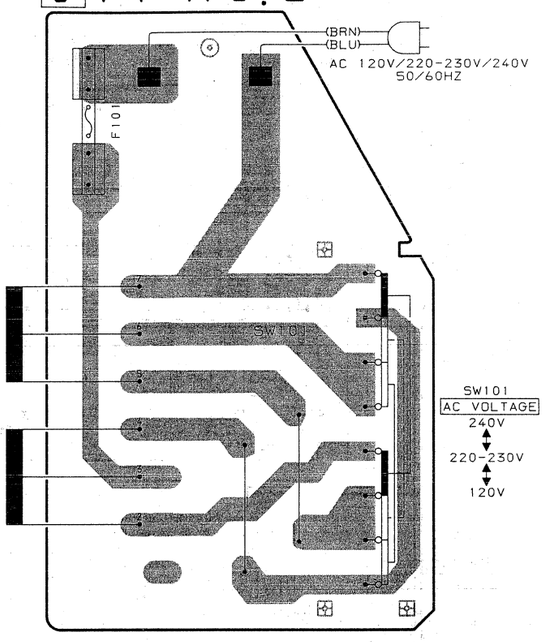

E AC-2 C.B

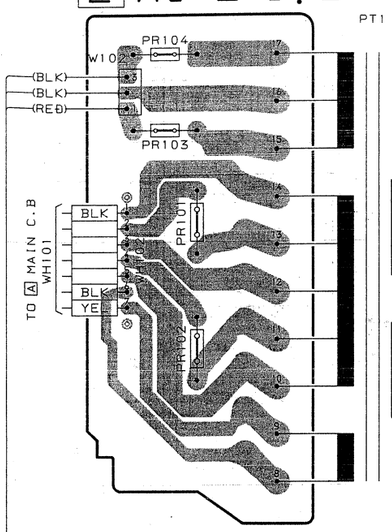

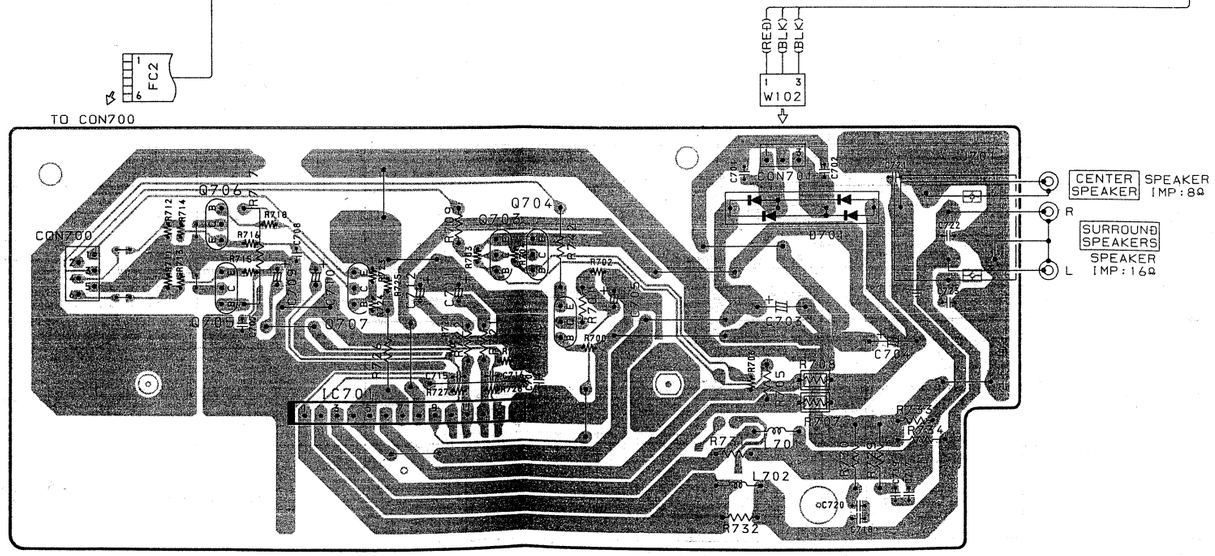

I R-AMP C.B

IC DESCRIPTION

IC, NJW1102F

Pin No.	Pin Name	I/O	Description
1	LLI	I	Lch BPF in.
2	LBPF	O	Lch BPF feed back out.
3	RLI	I	Rch BPF in.
4	RBPF	O	Rch BPF feed back out.
5	LT	O	Lch selector #1 out.
6	RT	O	Rch selector #1 out.
7	LIN	I	Lch signal input.
8	RIN	I	Rch signal input.
9	HOLDC	I	Auto input balance control.
10	VCC	–	Power supply.
11~13	NGC 3~1	I	Noise sequencer control.
14,15	NC	–	Not connect.
16	VDD	–	Power supply.
17	NC	–	Not used.
18	DATA	I	Serial data input.
19	SCK	I	Serial clock input.
20	REQ	I	Serial request (strobe) input.
21	IDS	I	IC select sw.
22	VSS	–	GND.
23	LOUT	O	Lch serial output.
24	ROUT	O	Rch serial output.
25	AUX1	O	AUX1 output (serial data change parallel output).
26	CT	O	Cch output (before trimmer).
27	C-OUT	O	Cch output (after trimmer).
28	ST	O	Sch output (before trimmer).
29	S-OUT	O	Sch output (after trimmer).
30	CMC	I	Center mode control.
31	SMRO	O	Sch amp (front L,R mix) output.
32	NC	–	Not used.
33	SMRI	I	Sch amp (front L,R mix) input.
34	AUX2	O	AUX2 output (serial data change parallel output).
35	SD	O	Selector #2 output (to delay IC).
36	SIMBB	I	Selector #2 input B (L-R).
37	SIMBA	I	Selector #2 input A (L+R).
38	L+R	O	L+R ch output.
39	L-R	O	L-R ch output.
40	GND	–	Gnd.
41	VREF	I	VREF in.
42	VREFG	O	Vref out.
43	IREF	I	Iref in.
44	DBIBN	O	Output to modify dolby B IC (inclused NJW1102).
45	LPIN	I	From delay input.
46~48	DBC 1~3	I	Dolby B NR control.
49	NC	–	Not used.
50~55	PSC 1~6	I	Dual time constant and threshold switches control.
56~63	RLC 1~8	I	Full-wave rectifier and log difference amp control.
64	NC	–	Not used.

See the NSX-H9/H90(S/M Code No. 09-966-141-50T) for the IC BLOCK DIAGRAM below.	
NSX-H9/H90	NSX-AVH9
M65849FP	M65849FP
BA3830S	BA3830S
BA3836	BA3836
BA3835S	BA3835S
BA3842F	BA3842F
LC7213D	LC7213D

See the NSX-H9/H90 (S/M Code No. 09-966-141-50T) for the IC DESCRIPTION below.	
NSX-H9/H90	NSX-AVH9
LC866424V-5A62	LC866424V-5A99

IC BLOCK DIAGRAM

IC, LA1836

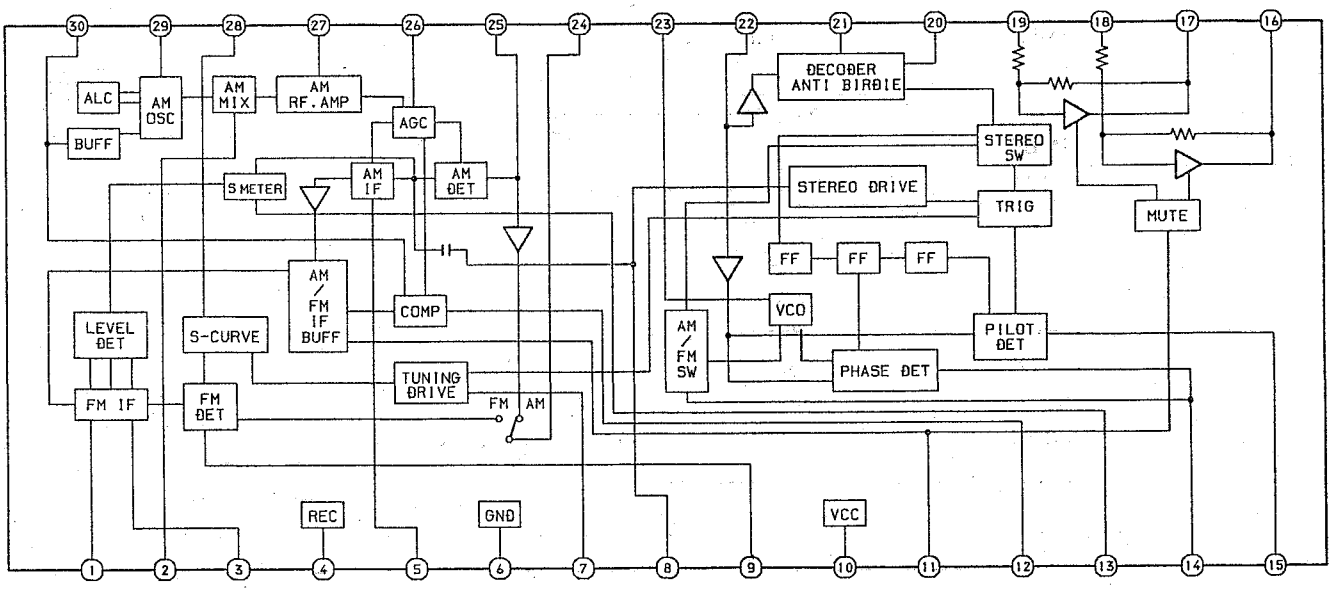

A MAIN C.B

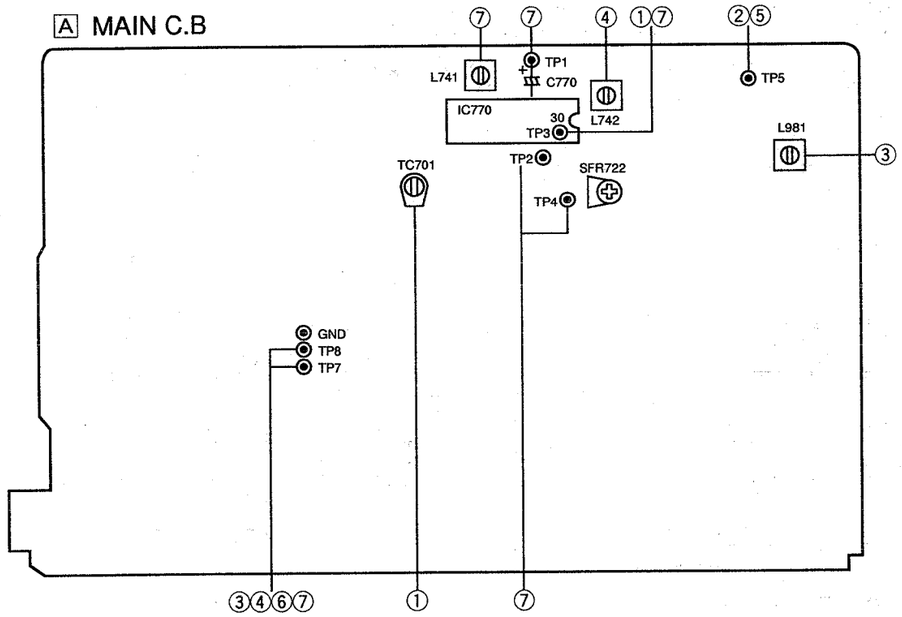

TUNER SECTION

1. Clock Frequency Adjustment
   Setting: • Test point : TP3(CLK)
   • Adjustment location : TC701
   Method: Set to AM 1710kHz and adjust TC701 so that the test point becomes 2160kHz ± 0.01kHz.

2. AM VT Check
   Setting: • Test point : TP5
   Method: Set to AM 1710kHz and check the test point is 6.3 ± 1.0V.

3. AM Tracking Adjustment
   Settings: • Test point : TP7(Lch), TP8(Rch)
   • Adjustment location : L981
   Method: Set to AM 1000kHz and adjust L981 so that the test point becomes maximum.

4. AM IF Adjustment
   Setting: • Test point : TP7(Lch), TP8(Rch)
   L742 ..... 450kHz

5. FM VT Check
   Setting: • Test point : TP1
   Method: Set to FM 87.5MHz and check that the test point is more than 1.5V.
   Then set to FM 108MHz and check that the test point is less than 8.2V.

6. FM Tracking Check
   Setting: • Test point : TP7(Lch), TP8(Rch)
   Method: Check that the test point is 3 ~ 12dB and distortion is less than 3% at FM98.0MHz.

7. DC Balance / MONO Distortion Adjustment
   Settings: • Test point : TP1, TP2 (DC Balance)
   TP7(Lch), TP8(ch) (Distortion)
   • Adjustment location : L741
   • Input level : 54dB
   Method: Set to FM 98.0MHz and adjust L741 so that the voltage between TP3 and TP4 becomes 0V ± 0.04V.
   Next check that the distortion is less than 1.3%.

TUNER SECTION

<FM SECTION>

IHF Sensitivity: (THD 3%)	Less than 10dB [at 87.5MHz]
	Less than 11dB [at 98.0/108.0MHz(HE)]
	Less than 8dB [at 98.0/108.0MHz(HR)]
S/N 50dB Quieting sensitivity:	Less than 35dB [at 87.5/98.0/108.0MHz]
Signal to noise ratio:	More than 54dB[at 98.0MHz]
Distortion:	Less than 1.5% [at 980.MHz]
Stereo separation:	More than 25dB [at 98.0MHz]
Intermediate frequency:	10.7MHz

<AM(MW) SECTION>

Sensitivity: (S/N 20dB)	48 ~ 62dB [at 603kHz]
	47 ~ 59dB [at 999kHz]
	47 ~ 59dB [at 1404kHz]
Signal to noise ratio:	More than 36dB[at 999kHz]
Distortion:	Less than 1.5% [at 999kHz]
Auto stop level:	50dB ± 10dB[at 999kHz]
Intermediate frequency:	450kHz

MECHANICAL EXPLODED VIEW 1 ／ 1

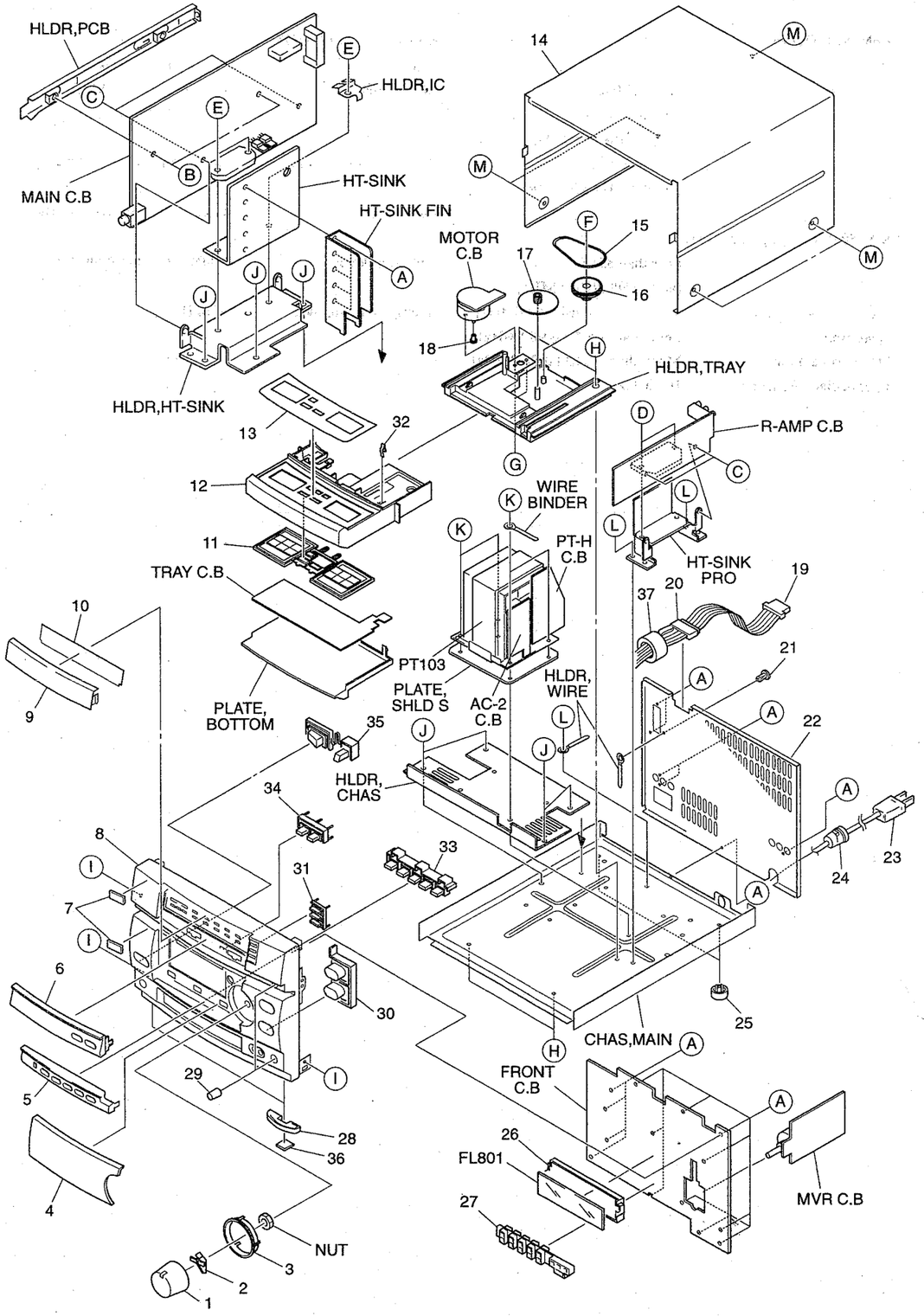

MECHANICAL PARTS LIST 1 ／ 1

DESCRIPTION で判断できない物は “REFERENCE NAME LIST” を参照してください。
If can't understand for Description please kindly refer to “REFERENCE NAME LIST”.

REF. NO.	PART NO.	カンリ NO.	DESCRIPTION
1	86-NT1-021-019		KNOB,RTRY VOL
2	86-NT1-022-019		REFLECTOR,VOL
3	86-NT1-026-019		RING,VOL
4	86-NT1-028-019		WINDOW,DISPLAY
5	86-NT1-006-019		PANEL,FUN
6	86-NT1-005-019		PANEL,GEQ
7	82-NE8-032-019		BADGE AIWA 27.5
8	86-NTM-001-110		CABI,FR
9	86-NT1-027-019		WINDOW,GEQ
10	86-NTM-003-010		PLATE,PRO
11	86-NT1-013-019		KEY,GEQ
12	86-NT1-004-019		TRAY,CONTROL
13	86-NTM-004-010		PLATE,TRAY 21
14	86-NT1-003-019		CABI,STEEL
15	80-VW1-217-010		BELT,SQ 1.5
16	82-NT1-205-11K		PULLEY,LOADING (*)
17	82-NT1-204-01K		GEAR,LOADING
18	80-VW1-204-010		PULLEY,MOTOR
19	86-NT2-655-010		CORD,FG15P
20	89-VT5-202-010		BUSHING,CORD
21	87-084-077-019		NYLON RIVET DIA3.5-4.5
22	86-NTM-011-010		PANEL,REAR HEJBNM<HE>
22	86-NTM-017-010		PANEL,REAR HRJBNM<HR>
⚠ 23	87-050-079-019		AC-CORD ASSY,E
24	87-085-185-019		BUSHING,AC CORD E
25	87-085-213-019		FOOT, H12.5
26	86-NT1-203-019		GUIDE,FL
27	86-NT1-202-019		GUIDE,LED
28	85-NC1-019-019		RING,FOOT
29	86-NT1-023-019		KNOB,RTRY MIC
30	86-NT1-009-019		KEY,UP/DOWN
31	86-NT1-011-019		KEY,RDS
32	81-MT3-211-019		LEVER,OPEN
33	86-NT1-020-019		KEY,ASSY FUN
34	86-NT1-010-010		KEY,PRO
35	86-NT1-008-019		KEY,POWER
36	80-VT1-202-010		FELT,12.5-15.5-2
37	87-003-317-010		F-BEAD,15-25-15 E2515MRT
A	87-067-703-019		BVT2+3-10 (W/O SLOT)
B	87-078-084-019		BVTT+3-6 W,CONVEX
C	87-067-633-019		BVT2+3-8 W/CONVEX
D	87-067-581-019		BVT2+3-15 W/O SLOT
E	87-067-822-019		BVT2+3-20 W/O SLOT
F	87-861-095-419		VFT2+3-8 SLOT
G	87-261-073-419		V+2.6-6
H	87-067-584-019		BVT2+3-6 W/O SLOT
I	87-591-094-419		QIT + 3 - 6 GOLD
J	87-571-092-419		VIT+3-4
K	87-067-975-010		S-SCREW,IT+4-8 SWCH12A
L	87-067-688-019		BVTT +3-6
M	87-067-641-019		UTT2+3-8 W/O SLOT BLK

■ ACCESSORIES／PACKAGE LIST

DESCRIPTIONで判断できない物は "REFERENCE NAME LIST" を参照してください。
If can't understand for Description please kindly refer to "REFERENCE NAME LIST".

REF. NO	PART NO.	カンリ NO.	DESCRIPTION
1	86-NTM-901-019		IB,H(ECA)
2	85-NT3-661-019		RC-T506
3	87-006-225-019		AM LOOP ANT NC2
4	87-043-115-019		ANT,FEEDER FM
5	87-099-789-019		PLUG,ADPTR IR44

MODEL NO.

SX-NAVH9

SPEAKER PARTS LIST

DESCRIPTIONで判断できない物は "REFERENCE NAME LIST" を参照してください。
If can't understand for Description please kindly refer to "REFERENCE NAME LIST".

REF. NO	PART NO.	カンリ NO.	DESCRIPTION
1	86-NSM-001-010		PANEL FR
2	86-NSM-004-010		GRILLE FRAME ASSY
3	86-NS2-602-010		SPKR W 140
4	86-MS2-603-110		SPKR TW 60
5	86-NSM-610-010		TERMINAL ASSY
6	83-096-614-010		SPKR CORD

MODEL NO.

SX-R230

SPEAKER PARTS LIST

DESCRIPTIONで判断できない物は "REFERENCE NAME LIST" を参照してください。
If can't understand for Description please kindly refer to "REFERENCE NAME LIST".

REF. NO	PART NO.	カンリ NO.	DESCRIPTION
1	85-NSX-001-010		PANEL FR
2	85-NSX-005-010		GRILLE FRAME ASSY
3	85-NSX-601-010		SPKR
4	81-VSA-010-010		SPKR CORD

MODEL NO.

SX-C400

SPEAKER PARTS LIST

DESCRIPTIONで判断できない物は "REFERENCE NAME LIST" を参照してください。
If can't understand for Description please kindly refer to "REFERENCE NAME LIST".

REF. NO	PART NO.	カンリ NO.	DESCRIPTION
1	85-NSY-001-010		PANEL FR
2	85-NSY-010-010		GRILLE FRAME ASSY
3	85-NSY-602-010		SPKR
4	83-NSM-010-010		SPKR CORD

REFERENCE NAME LIST

ELECTRICAL SECTION

DESCRIPTION	REFERENCE NAME
ANT	ANTENNAS
C-	CHIP
C-CAP	CAP, CHIP
C-CAP TN	CAP, CHIP TANTALUM
C-COIL	COIL, CHIP
C-DI	DIODE, CHIP
C-DIODE	DIODE, CHIP
C-FET	FET, CHIP
C-FOTR	FILTER, CHIP
C-JACK	JACK, CHIP
C-LED	LED, CHIP
C-RES	RES, CHIP
C-SFR	SFR, CHIP
C-SLIDE SW	SLIDE SWITCH, CHIP
C-SW	SWITCH, CHIP
C-TR	TRANSISTOR, CHIP
C-VR	VOLUME, CHIP
C-ZENER	ZENER, CHIP
CAP, CER	CAP, CERA-SOL
CAP, E	CAP, ELECT
CAP, M/F	CAP, FILM
CAP, TC	CAP, CERA-SOL
CAP, TC-U	CAP, CERA-SOL SS
CAP, TN	CAP, TANTALUM
CERA FIL	FILTER, CERAMIC
CF	FILTER, CERAMIC
DL	DELAY LINE
E/CAP	CAP, ELECT
FILT	FILTER
FLTR	FILTER
FUSE RES	RES, FUSE
MOT	MOTOR
P-DIODE	PHOTO DIODE
P-SNSR	PHOTO SENSER
P-TR	PHOTO TRANSISTOR
POLY VARI	VARIABLE CAPACITOR
PPCAP	CAP, PP
PT	POWER TRANSFORMER
PTR, RES	PTR, MELF
RC	REMOTE CONTROLLER
RES NF	RES, NON-FLAMMABLE
RESO	RESONATOR
SHLD	SHIELD
SOL	SOLENOID
SPKR	SPEAKER
SW, LVR	SWITCH, LEVER
SW, RTRY	SWITCH, ROTARY
SW, SL	SWITCH, SLIDE
TC CAP	CAP, CERA-SOL
THMS	THERMISTOR
TR	TRANSISTOR
TRIMMER	CAP, TRIMMER
TUN-CAP	VARIABLE CAPACITOR
VIB, CER	RESONATOR, CERAMIC
VIB, XTAL	RESONATOR, CRYSTAL
VR	VOLUME
ZENER	DIODE, ZENER
サージサプレッサ	SERGESUPPRESSOR
セラコン	CAP,CERA

MECHANICAL SECTION

DESCRIPTION	REFERENCE NAME
ADHESHIVE	SHEET ADHESHIVE
AZ	AZIMUTH
BAR-ANT	BAR-ANTENNA
BAT	BATTERY
BATT	BATTERY
BRG	BEARING
BTN	BUTTON
CAB	CABINET
CASS	CASSETTE
CHAS	CHASSIS
CLR	COLLAR
CONT	CONTROL
CRSR	CURSOR
CU	CUSHION
CUSH	CUSHION
DIR	DIRECTION
DUBB	DUBBING
FL	FRONT LOADING
FLY-WHL	FLYWHEEL
FR	FRONT
FUN	FUNCTION
G-CU	G-CUSHION
HDL	HANDOL
HIMERON	CLOTH
HINGE, BAT	HINGE, BATTERY
HLDR	HOLDER
HT-SINK	HEAT SINK
IB	INSTRUCTION BOOKLET
IDLE	IDLER
IND, L-R	INDICATOR, L-R
KEY, CONT	KEY, CONTROL
KEY, PRGM	KEY, PROGRAM
KNOB, SL	KNOB, SLIDE
LBL	LABEL
LID, BATT	LID, BATTERY
LID, CASS	LID, CASSETTE
LVR	LEVER
P-SP	P-SPRING
PANEL, CONT	PANEL, CONTROL
PANEL, FR	PANEL, FRONT
PRGM	PROGRAM
PULLY, LOAD MO	PULLY, LOAD MOTOR
RBN	RIBBON
S-	SPECIAL
SEG	SEGMENT
SH	SHEET
SHLD-SH	SHIELD-SHEET
SL	SLIDE
SP	SPRING
SP-SCREW	SPECIAL-SCREW
SPACER, BAT	SPACER, BATTERY
SPR	SPRING
SPR-P	P-SPRING
SPR-PC-PUSH	P-SPRING, C-PUSH
T-SP	T-SPRING
TERM	TERMINAL
TRIG	TRIGGER
TUN	TUNING
VOL	VOLUME
W	WASHER
WHL	WHEEL
WORM-WHL	WORM-WHEEL
ジグアーム	ARM,SHAFT
ジグガイド	GUIDE,SHAFT
ストラップ	STRAP
トクナベ	S-SCREW
ヒンジ	HINGE
ヒンジビス	S-SCREW
ビスセレート	SCREW,SERRART

サービス技術ニュース	
番 号	連絡内容
G一 一	
G一 一	
G一 一	

アイワ株式会社
AIWA CO.,LTD.

〒110 東京都台東区池之端1－2－11 ☎ 03 (3827) 3111 （代表）

920074, 750038

Tokyo Japan

Printed in Singapore

aiwa

VIDE-V16442

aiwa SERVICE

4ZG-1
4ZG-1A
4ZG-1B
4ZG-1Z

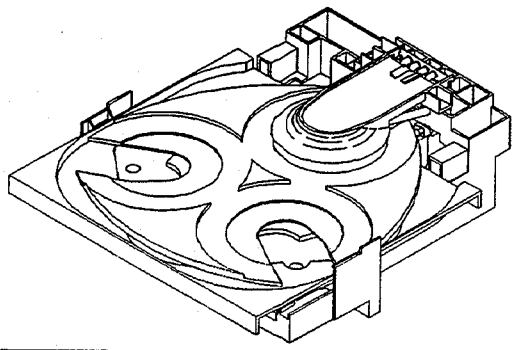

CD MECHANISM

SERVICE MANUAL

• BASIC CD MECHANISM: KSM-2 131 BAM
3ZG-2 C1 / 3ZG-2 C2 / 3ZG-2 C5

•TYPE: English

BASIC NAME		DERIVATION NAME							
4ZG-1	*1	–	–	–	–	WR	–	–	–
	*2	G	D	F	R	—	V3L	V4L	V5
4ZG-1A		G	D	–	–	–	–	–	–
4ZG-1B		G	D	–	–	–	–	–	–
4ZG-1Z		–	D	–	–	–	–	–	–

●*1,*2, have the same BASIC NAME but the board structures are different. The CD BLOCK,VCD BLOCK of the WR are shown on the SERVICE MANUAL of each DERIVATION NAME .

●This mechanism has various derivation. Derivation name is indicated by the Service Manual for eath model.

●For different version of mechanism that may be introduced since the issue of this manual, only the new or modified points be discussed.

S/M Code No. 09-965-128-10T

TABLE OF CONTENTS

PROTECTION OF EYES FROM LASER BEAM DURING SERVICING 3
SUFFIX NOTE 4
How to Adjust Rotating Phase of the Gear, Main Cam 5
TRANSISTOR ILLUSTRATION 5

4ZG-1 <VCD>

ELECTRICAL MAIN PARTS LIST ..... 6~9
IC BLOCK DIAGRAM 10
BLOCK DIAGRAM-1 (V3L: MAIN VCD / CD MECHA) 11, 12
BLOCK DIAGRAM-2 (V3L: VCD) 13, 14
BLOCK DIAGRAM-3 (V4L: MAIN VCD / CD MECHA) 15, 16
BLOCK DIAGRAM-4 (V4L: VCD) 17, 18
BLOCK DIAGRAM-5 (V5) 19, 20
WIRING-1 (V3L: MAIN VCD / CD MECHA) 21, 22
SCHEMATIC DIAGRAM-1 (V3L: CD MECHA) 23, 24
SCHEMATIC DIAGRAM-2 (V3L: MAIN VCD) 25, 26
SCHEMATIC DIAGRAM-3 (V3L: VCD) 27, 28
WIRING-2 (V3L: VCD) 29, 30
WAVE FORM 31
WIRING-3 (WR) 32
SCHEMATIC DIAGRAM-4 (WR) 32
WIRING-4 (V4L: MAIN VCD / CD MECHA) 33, 34
SCHEMATIC DIAGRAM-5 (V4L: CD MECHA) 35, 36
SCHEMATIC DIAGRAM-6 (V4L: MAIN VCD) 37, 38
SCHEMATIC DIAGRAM-7 (V4L: VCD 1/2) 39, 40
SCHEMATIC DIAGRAM-8 (V4L: VCD 2/2) 41, 42
WAVE FORM • WIRING-5 (V4L: VCD) ..... 43~45
WIRING-6 (V5: MAIN VCD) ..... 46~48
SCHEMATIC DIAGRAM-9 (V5: MAIN VCD 1/2) 49, 50
SCHEMATIC DIAGRAM-10 (V5: MAIN VCD 2/2) 51, 52
WAVE FORM 53, 54
SCHEMATIC DIAGRAM-11 (V5: CD MECHA) 55, 56
WIRING-7 (V5: CD MECHA) 57
IC DESCRIPTION ..... 58~90
TEST MODE 91
ELECTRICAL ADJUSTMENT ..... 92~94
MECHANICAL EXPLODED VIEW 1 / 1 95
MECHANICAL PARTS LIST 1 / 1 96
CD MECHANISM EXPLODED VIEW, LIST 1 / 1 (3ZG-2 C5N <WR>) 97
CD MECHANISM EXPLODED VIEW, LIST 1 / 1 (3ZG-2 C1N <V3L/V4L/V5>) 98

4ZG-1 <A>

ELECTRICAL MAIN PARTS LIST 99, 100
BLOCK DIAGRAM 101, 102
WIRING 103, 104
SCHEMATIC DIAGRAM 105, 106
WAVE FORM 107
IC BLOCK DIAGRAM 107
IC DESCRIPTION 108, 109
TEST MODE 110
ELECTRICAL ADJUSTMENT ..... 111~113
CD MECHANISM EXPLODED VIEW, LIST 1 / 1 (KSM-2131BAM <A, B>) 114

4ZG-1 <B>

ELECTRICAL MAIN PARTS LIST 115, 116
BLOCK DIAGRAM 117, 118
WIRING 119, 120
SCHEMATIC DIAGRAM 121, 122
WAVE FORM 123
IC BLOCK DIAGRAM 123
IC DESCRIPTION ..... 124~128
TEST MODE 129
ELECTRICAL ADJUSTMENT 130, 131

4ZG-1 <Z>

ELECTRICAL MAIN PARTS LIST 132, 133
BLOCK DIAGRAM 134, 135
WAVE FORM 136
IC BLOCK DIAGRAM 136
SCHEMATIC DIAGRAM 137, 138
WIRING 139, 140
IC DESCRIPTION ..... 141~145
TEST MODE 146
ELECTRICAL ADJUSTMENT 147, 148
CD MECHANISM EXPLODED VIEW, LIST 1 / 1 (3ZG-2 C2N <Z>) 149
USE MODEL LIST 150
REFERENCE NAME LIST 151

PROTECTION OF EYES FROM LASER BEAM DURING SERVICING

This set employs laser. Therefore, be sure to follow carefully the instructions below when servicing.

WARNING!
WHEN SERVICING, DO NOT APPROACH THE LASER EXIT WITH THE EYE TOO CLOSELY. IN CASE IT IS NECESSARY TO CONFIRM LASER BEAM EMISSION. BE SURE TO OBSERVE FROM A DISTANCE OF MORE THAN 30cm FROM THE SURFACE OF THE OBJECTIVE LENS ON THE OPTICAL PICK-UP BLOCK.

- Caution: Invisible laser radiation when open and interlocks defeated avoid expo-sure to beam.
- Advarsel: Usynlig laserstråling ved åbning, når sikkerhedsafbrydere er ude af funktion. Undgå udsættelse for stråling.

VAROITUS!
Laiteen Käyttäminen muulla kuin tässä käyttöohjeessa mainit-ulla tavalla saattaa altistaa käyt-täjän turvallisuusluokan 1 ylit-tävälle näkymättömälle lasersäteilylle.

VARNING!
Om apparaten används på annat sätt än vad som specificeras i denna bruksanvising, kan användaren utsättas för osynling laserstrålning, som överskrider gränsen för laserklass 1.

CAUTION
Use of controls or adjustments or performance of procedures other than those specified herein may result in hazardous radi-ation exposure.

ATTENTION
L'utilisation de commandes, réglages ou procédures autres que ceux spécifiés peut entraîner une dangereuse exposition aux radiations.

ADVARSEL!
Usynlig laserstråling ved åbning, når sikkerhedsafbrydereer ude af funktion. Undgå udsættelse for stråling.

This Compact Disc player is classified as a CLASS 1 LASER product.
The CLASS 1 LASER PRODUCT label is located on the rear exterior.

CLASS 1	LASER PRODUCT
KLASSE 1	LASER PRODUKT
LUOKAN 1	LASER LAITE
KLASS 1	LASER APPARAT

This is the SERVICE MANUAL for the BASIC CD MECHANISM of BASIC NAME: 4ZG-1. This BASIC NAME includes the following models as shown under the SUFFIX name: DERIVATION NAME. Please use this manual with the separate SERVICE MANUAL for DERIVATION NAME.

BASIC CD MECHANISM: 4ZG-1 AGD

SUFFIX
(DERIVATION NAME)

BASIC NAME: 4ZG-1 (ORIGINAL MODEL)
4ZG-1A (SONY IC MODEL)
4ZG-1B (TOSHIBA IC MODEL)
4ZG-1Z (SANYO IC MODEL)

BASIC NAME	DERIVATION NAME							
4ZG-1 *1	—	—	—	—	WR	—	—	—
4ZG-1 *2	G	D	F	R	—	V3L	V4L	V5
4ZG-1A	G	D	—	—	—	—	—	—
4ZG-1B	G	D	—	—	—	—	—	—
4ZG-1Z	—	D	—	—	—	—	—	—

NOTE:
- *1 and *2 have the same BASIC NAME but the board structures are different.
- The CD BLOCK, VCD BLOCK of the WR is shown on the SERVICE MANUAL of each DERIVATION NAME.
- Model 4ZG-1 A, B and Z has "F" as the standard installation.

BOARD NAME / BASIC NAME	3CD C.B	LED C.B	T-T C.B	MOTOR C.B	MAIN VCD C.B	CD MECHA C.B	VCD C.B	DRIVE C.B
4ZG-1 *1	—	—	○	—	—	—	—	○
4ZG-1 *2	—	○	○	—	○	○	○ (EXCEPT V5)	—
4ZG-1A	○	○	○	○	—	—	—	—
4ZG-1B	○	○	○	○	—	—	—	—
4ZG-1Z	○	○	○	—	—	—	—	○

DERIVATION NAME

G: Supporting the CD graphic feature
D: Digital output function
F: CD WINDOW Flash function (LED: AMBER/GREEN)
R: Round Tray
WR: With out Video CD and CD graphic board.
V3L: Supporting the video CD function PAL
V4L: Supporting the video CD function PAL
V5: Supporting the video CD function

How to Adjust the Rotating Phase of the Gear, Main Cam

1) Push down the hooking catch of the CHAS. MECH, and remove the TRAY.
2) Align the arrow mark of the Gear, Main Cam with the black round mark of the CHAS, MECHA as shown below.
3) Confirm that the Slide, Mech Cam is located in the right position, then insert the TRAY gently.

Caution: If the rotating phase of the Gear, Main Cam is incorrectly adjusted, the chucking operation and tray movement will have malfunction.

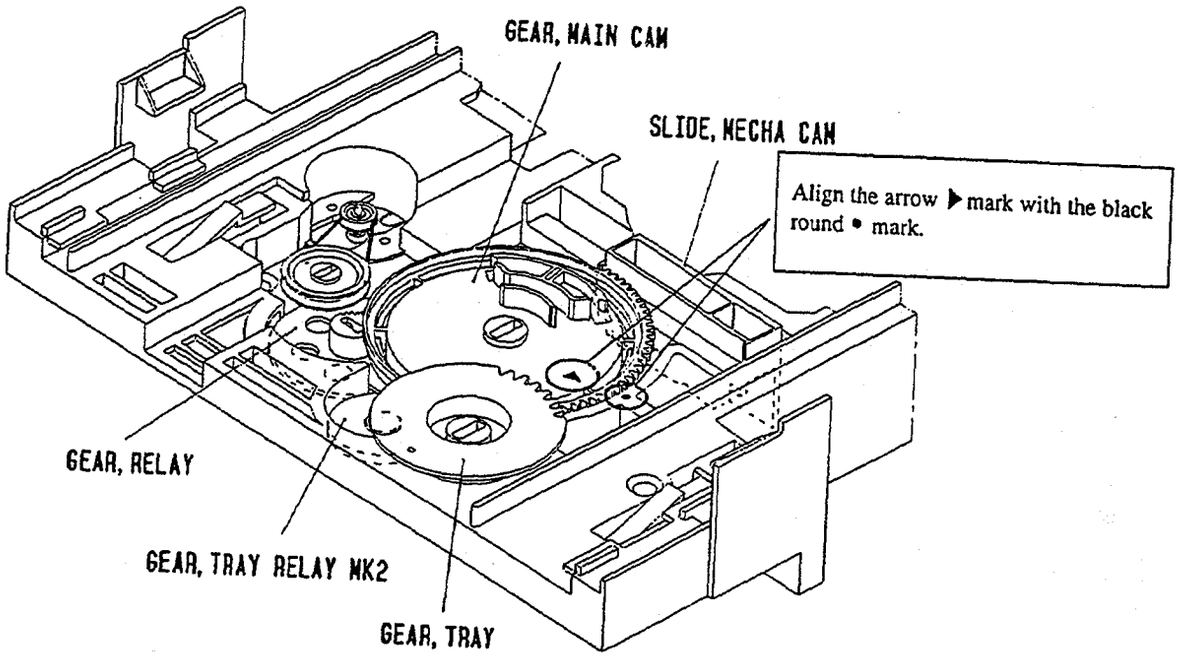

TRANSISTOR ILLUSTRATION

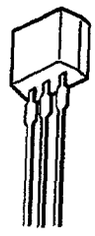

2SA933

2SA1296
2SA1318
2SC1815
2SC2001
2SD655
2SD2172

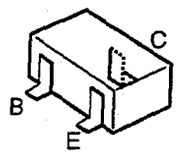

2SA1037
2SA1162
2SA1362
2SA1576
2SC2712
2SC3326
2SC4081
2SD1383

DTA123JK
DTA144TK
DTC114TK
DTC123JK
DTC124XK
DTC143TK
RN1441

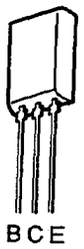

2SD2005

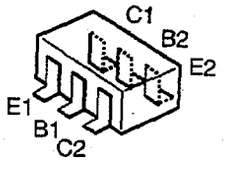

HN1C03

4ZG-1

ELECTRICAL MAIN PARTS LIST

DESCRIPTION で判断できない物は "REFERENCE NAME LIST" を参照してください。
If can't understand for Description please kindly refer to "REFERENCE NAME LIST".

REF. NO.	PART NO.	カンリ NO.	DESCRIPTION
IC			
	SC-L48-000-000		IC,CL480<V3L>
	S4-730-42X-010		IC,HD6473042F16(5EULF6)<V4L>
	SC-XD1-178-Q00		IC,CXD1178Q<V3L>
	SA-T27-C51-2R1		IC,AT27C512R-15JC<V3L>
	SX-D11-86X-010		IC,CXD1186CR(5EUNFC)<V4L>
	SC-008-K81-R10		IC,BR6265AF-10LL(5EUMFS)<V4L>
	ST-C51-425-6BJ		IC,TC514256BJ-70<V3L>
	SC-032-K81-MA0		IC,M5M5256CFP-70LL(5EUMFS)<V4L>
	87-001-948-080		IC,PST572CMT(5EUBFP)<V4L>
	SD-493-07X-010		IC,HD49307(5EUNFH)<V4L>
	SM-C68-MC7-05C		IC,MC68HC705C8ACP<V3L>
	87-002-259-080		IC,uPD6376GS<V3L>
	87-001-607-080		IC,BA4558F<V3L>
	82-NV1-628-080		IC,CXA1645M(5EUBFC)<V3L,V4L>
	SP-D63-210-010		IC,UPD63210GT-E1(5EUNFU)<V4L>
	SS-N74-HCU-04D		IC,SN74HCU04DR<V3L>
	S1-010-XXX-010		IC,UPD61010AGD-LBD(5EULF6)<V4L>
	SC-170-CXX-010		IC,TC170C100AF-001(5EUKFT)<V4L>
	SC-256-KG1-T10		IC,TC514260BJ-70(5EULMD)<V4L>
	SC-000-002-000		IC,TC514260BJ-70(5EULMD)<V4L>
	SL-C29-32X-010		IC,TLC2932IPW(5EUNFT)<V4L>
	87-017-745-019		IC,CXA1782BQ<EXCEPT V5,WR>
	87-002-783-110		IC,CXD2500BQ<EXCEPT WR>
	87-A20-257-049		IC,BA6791FP<V5>
	87-070-120-049		IC,BA6897 FP<EXCEPT V5,WR>
	87-070-429-019		IC,NJM2244L<EXCEPT V5,WR>
	87-002-532-019		IC,PQ05RF11<V5>
	87-017-825-019		IC,GP1F32T<D,V5>
	87-001-873-019		IC,LB1644<V5>
	84-ZG1-639-010		C-IC,MB89627<V5>
	ST-C74-HC2-570		IC,TC74HC257<V3L>
	83-NFT-618-010		IC,UPD78044BGF<V3L>
	85-MAR-614-010		IC,UPD78044BGF-025<V4L>
	87-070-430-019		IC,LA6530<EXCEPT V5,WR>
	87-017-543-089		IC,PST 600D<V5>
	87-A20-255-049		C-IC,SN74LV373NS<V5>
	87-A20-251-049		C-IC,BR6265BF-N10SL<V5>
	87-A20-252-049		C-IC,SN74LV00NS<V5>
	87-A20-253-049		C-IC,SN74LV04NS<V5>
	87-A20-254-049		C-IC,SN74LV32NS<V5>
	87-A20-244-010		C-IC,CL484<V5>
	87-020-881-089		IC,NJM78L05A<EXCEPT V5,WR>
	87-A20-200-040		C-IC,HM514260CJ7/CLJ7<V5>
	87-017-888-089		IC,NJM4558MD<V4L>
	84-ZG1-640-049		C-IC,LH5317<V5>
	87-A20-256-049		C-IC,PQ20VZ5U<V5>
	87-A20-247-019		C-IC,BU1417AK<V5>
	87-017-802-010		IC,LC7872E<G>
	87-A20-248-049		C-IC,BU2173F<V5>
	87-017-803-010		IC,LC32464P-80<G>
	87-A20-258-040		C-IC,SM5877AM<V5>
TRANSISTOR			
	SC-408-1XX-010		TR,2SC4081(5EQQ2S)<V4L>
	S1-441-XXX-010		TR,RN1441-A(5EQQRN)<V4L>
	SA-157-6XX-010		TR,2SA1576(5EQQ2S)<V4L>
	89-111-625-089		C-TR,2SA1162GR<EXCEPT V5,WR>
	87-026-237-089		C-TR,DTC124XK<EXCEPT WR>
	87-327-125-089		C-TR,2SC2712 GR<V5>
	89-113-625-089		C-TR 2SA 1362 GR(TAPG)<V5>
	89-327-125-089		C-TR,2SC2712GR<EXCEPT WR>
	89-112-965-089		TR,2SA1296GR<EXCEPT WR>
	87-026-608-089		C-TR,DTC 123 JK<F>
	89-324-585-010		TR,2SC2458<V3L>
	89-333-266-089		C-TR,2SC3326B<EXCEPT V5,WR>
	87-026-580-089		C-TR,DTA123JK<EXCEPT WR>
	87-026-470-089		TR,HN1C03 F B<V5>
	89-318-155-089		TR,2SC1815 GR<V5>
DIODE			
	S0-041-480-000		DIODE,1N4148<V3L>
	S1-305-700-283		DIODE,DA115(5EDQDD)<V4L>
	S0-240-010-000		DIODE,1N4001<V3L>
	SA-P20-2UX-010		DIODE,DAP202U(5EDQDD)<V4L>
	87-002-608-089		DIODE,DSF10TC<V4L>
	87-017-430-090		DIODE,RK14<V3L>
	87-020-465-089		DIODE,ISS133<EXCEPT V5,WR>
	SM-TZ2-7B0-000		ZENER,MTZ2.7B<V3L>
	87-020-027-089		C-DIODE 1SS184<V5>
	87-A40-180-049		C-DIODE SB07-015 C<V5>
	87-A40-196-089		C-ZENER UDZ6.2 B<V5>
MAIN VCD C.B<V3L,V4L>			
C101	87-012-140-089		C-CAP,S 470P-50 CH<EXCEPT WR>
C102	87-010-194-089		C-CAP,S 0.047-25 F
C103	87-010-178-089		C-CAP,S 1000P-50 B
C104	87-012-156-089		C-CAP,S 220P-50 CH
C105	87-010-384-089		CAP,E 100-25 SME
C106	87-010-196-089		C-CAP,S 0.1-25 F
C107	87-010-314-089		C-CAP,S 22P-50 CH
C108	87-010-314-089		C-CAP,S 22P-50 CH
C110	87-010-221-089		CAP,E 470-10 11L
C111	87-010-320-089		C-CAP,S 68P-50 CH
C112	87-010-196-089		C-CAP,S 0.1-25 F<V4L>
C112	87-016-463-089		C-CAP,S 0.33-16 B<V3L>
C113	87-010-260-089		CAP,E 47-25 SME
C114	87-010-498-049		CAP,E 10-16 GAS
C115	87-010-498-049		CAP,E 10-16 GAS<G>
C116	87-010-196-089		C-CAP,S 0.1-25 F
C117	87-010-197-089		C-CAP,S 0.01-25 B
C118	87-010-553-049		CAP,E 47-16 GAS<V4L>
C119	87-010-553-049		CAP,E 47-16 GAS
C120	87-010-197-089		C-CAP,S 0.01-25 B
C121	87-010-384-089		CAP,E 100-25 SME<V4L>
C122	87-010-320-089		C-CAP,S 68P-50 CH<D>
C123	87-010-401-089		CAP,E 1-50 SME
C124	87-A10-011-019		CAP,E 2200-25 SMG
C125	87-010-322-089		C-CAP,S 100P-50 CH
C126	87-010-178-089		C-CAP,S 1000P-50 B
C127	87-010-314-089		C-CAP,S 22P-50 CH<G>
C128	87-010-320-089		C-CAP,S 68P-50 CH
C129	87-010-263-089		CAP,E 100-10 SME<D>
C130	87-010-197-089		C-CAP,S 0.01-25 B<D>
C131	87-010-197-089		C-CAP,S 0.01-25 B
C132	87-010-196-089		C-CAP,S 0.1-25 F
C133	87-010-196-089		C-CAP,S 0.1-25 F
C134	87-010-196-089		C-CAP,S 0.1-25 F
C135	87-010-196-089		C-CAP,S 0.1-25 F
C136	87-010-154-089		C-CAP,S 10P-50 CH<V4L>
C201	87-010-382-089		CAP,E 22-25 SME
C202	87-010-197-089		C-CAP,S 0.01-25 B

REF. NO.	PART NO.	カンリ NO.	DESCRIPTION
C203	87-010-382-089		CAP,E 22-25 SME
C204	87-010-381-089		CAP,E 330-16 SME
C205	87-010-196-089		C-CAP,S 0.1-25 F
C206	87-010-196-089		C-CAP,S 0.1-25 F
C207	87-010-498-049		CAP,E 10-16 GAS<F>
C208	87-010-405-089		CAP,E 10-50 SME
C301	87-010-197-089		C-CAP,S 0.01-25 B
C306	87-010-381-089		CAP,E 330-16 SME<V4L>
C307	87-010-553-049		CAP,E 47-16 GAS
C308	87-010-498-049		CAP,E 10-16 GAS
C309	87-010-404-089		CAP,E 4.7-50 SME<V4L>
C310	87-010-404-089		CAP,E 4.7-50 SME<V4L>
C311	87-012-140-089		C-CAP,S 470P-50 CH<V4L>
C312	87-012-140-089		C-CAP,S 470P-50 CH<V4L>
C313	87-010-384-089		CAP,E 100-25 SME<V4L>
C315	87-010-404-089		CAP,E 4.7-50 SME<V4L>
C316	87-010-404-089		CAP,E 4.7-50 SME<V4L>
C317	87-010-197-089		C-CAP,S 0.01-25 B
C318	87-010-197-089		C-CAP,S 0.01-25 B
C401	87-010-405-089		CAP,E 10-50 SME<G>
C402	87-010-314-089		C-CAP,S 22P-50 CH<G>
C403	87-010-315-089		C-CAP,S 27P-50 CH<G>
C406	87-010-384-089		CAP,E 100-25 SME<G>
C407	87-010-384-089		CAP,E 100-25 SME<G>
C408	87-010-196-089		C-CAP,S 0.1-25 F<G>
C409	87-010-196-089		C-CAP,S 0.1-25 F<G>
CON6	83-NFT-628-019		CONN ASSY,8P<V3L>
EM101	87-008-474-089		F-BEAD,EMI BL02RN1
EM102	87-008-474-089		F-BEAD,EMI BL02RN1
FC1	85-NFT-612-019		FF-CABLE,30P-1.0<V4L>
FC2	88-912-131-219		FF-CABLE,12P 1.25
FC3	85-MAR-617-019		FF-CABLE,6P-1.25
J101	87-009-502-019		JACK,PIN 1PY EARTH
L101	87-003-149-089		COIL,47UH
L102	87-003-149-089		COIL,47UH
L103	87-003-143-089		COIL,4.7UH
L401	87-003-149-089		COIL,47UH<G>
L402	87-003-149-089		COIL,47UH<G>
M401	87-045-305-019		MOTOR, RF-500TB
PR101	87-026-689-089		PROTECTOR,1A 60V 491
SW201	87-036-109-019		SW,PUSH SPPB 61
SW202	87-036-109-019		SW,PUSH SPPB 61
X101	87-030-270-089		VIB,XTAL 16.9344MHZ
X201	89-MX1-704-089		CERA LOCK(MU)3.9MHZ
X401	80-JUC-602-089		VIB,XTAL 17.73MHZ<G>

MAIN VCD C.B<V5>

REF. NO.	PART NO.	カンリ NO.	DESCRIPTION
C101	87-010-197-089		C-CAP,S 0.01-25 B
C102	87-010-550-049		CAP,E 100-6.3 GAS
C103	87-010-318-089		C-CAP,S 47P-50 CH
C104	87-010-197-089		C-CAP,S 0.01-25 B
C105	87-010-318-089		C-CAP,S 47P-50 CH
C106	87-010-549-049		CAP,E 47-6.3 GAS
C107	87-012-156-089		C-CAP,S 220P-50 CH
C108	87-010-184-089		C-CAP,S 3300P-50 B
C109	87-010-194-089		C-CAP,S 0.047-25 F
C110	87-012-140-089		C-CAP,S 470P-50 CH
C111	87-010-197-089		C-CAP,S 0.01-25 B
C112	87-016-461-089		C-CAP,S 0.47-16 F
C113	87-010-196-089		C-CAP,S 0.1-25 F
C114	87-010-550-049		CAP,E 100-6.3 GAS
C115	87-010-197-089		C-CAP,S 0.01-25 B
C116	87-010-561-049		CAP,E 100-16 GAS
C117	87-010-562-049		CAP,E 220-10 GAS
C118	87-010-553-049		CAP,E 47-16 GAS
C119	87-010-197-089		C-CAP,S 0.01-25 B
C120	87-010-555-089		CAP,E 100-10 GAS
C121	87-010-197-089		C-CAP,S 0.01-25 B
C201	87-010-499-049		CAP,E 22-6.3 GAS
C202	87-010-197-089		C-CAP,S 0.01-25 B
C203	87-010-196-089		C-CAP,S 0.1-25 F
C204	87-010-316-089		C-CAP,S 33P-50 CH
C205	87-010-316-089		C-CAP,S 33P-50 CH
C206	87-010-499-049		CAP,E 22-6.3 GAS
C207	87-010-197-089		C-CAP,S 0.01-25 B
C208	87-010-197-089		C-CAP,S 0.01-25 B
C209	87-010-197-089		C-CAP,S 0.01-25 B
C210	87-010-197-089		C-CAP,S 0.01-25 B
C211	87-010-197-089		C-CAP,S 0.01-25 B
C212	87-010-318-089		C-CAP,S 47P-50 CH
C301	87-010-549-049		CAP,E 47-6.3 GAS
C302	87-010-549-049		CAP,E 47-6.3 GAS
C304	87-010-197-089		C-CAP,S 0.01-25 B
C305	87-010-197-089		C-CAP,S 0.01-25 B
C306	87-010-197-089		C-CAP,S 0.01-25 B
C307	87-010-197-089		C-CAP,S 0.01-25 B
C308	87-010-197-089		C-CAP,S 0.01-25 B
C309	87-010-197-089		C-CAP,S 0.01-25 B
C310	87-010-197-089		C-CAP,S 0.01-25 B
C311	87-010-197-089		C-CAP,S 0.01-25 B
C312	87-010-197-089		C-CAP,S 0.01-25 B
C313	87-010-318-089		C-CAP,S 47P-50 CH
C314	87-010-196-089		C-CAP,S 0.1-25 F
C315	87-010-196-089		C-CAP,S 0.1-25 F
C316	87-010-549-049		CAP,E 47-6.3 GAS
C317	87-010-314-089		C-CAP,S 22P-50 CH
C319	87-010-314-089		C-CAP,S 22P-50 CH
C320	87-010-196-089		C-CAP,S 0.1-25 F
C321	87-010-550-049		CAP,E 100-6.3 GAS
C322	87-010-197-089		C-CAP,S 0.01-25 B
C323	87-010-550-049		CAP,E 100-6.3 GAS
C324	87-010-197-089		C-CAP,S 0.01-25 B
C401	87-010-197-089		C-CAP,S 0.01-25 B
C402	87-010-550-049		CAP,E 100-6.3 GAS
C403	87-010-197-089		C-CAP,S 0.01-25 B
C404	87-012-140-089		C-CAP,S 470P-50 CH
C405	87-010-322-089		C-CAP,S 100P-50 CH
C406	87-012-140-089		C-CAP,S 470P-50 CH
C407	87-016-350-049		CAP,E 470-4 MA GAS
C408	87-010-196-089		C-CAP,S 0.1-25 F
C409	87-010-197-089		C-CAP,S 0.01-25 B
C410	87-010-197-089		C-CAP,S 0.01-25 B
C411	87-010-550-049		CAP,E 100-6.3 GAS
C412	87-010-197-089		C-CAP,S 0.01-25 B
C413	87-010-314-089		C-CAP,S 22P-50 CH
C414	87-010-316-089		C-CAP,S 33P-50 CH
C415	87-010-499-049		CAP,E 22-6.3 GAS
C416	87-010-197-089		C-CAP,S 0.01-25 B
C418	87-010-197-089		C-CAP,S 0.01-25 B
C420	87-010-196-089		C-CAP,S 0.1-25 F
C421	87-012-140-089		C-CAP,S 470P-50 CH
C422	87-010-184-089		C-CAP,S 3300P-50 B
C422	87-010-184-089		C-CAP,S 3300P-50 B
C423	87-010-175-089		C-CAP,S 560P-50 SL
C424	87-010-317-089		C-CAP,S 39P-50 CH
C425	87-012-140-089		C-CAP,S 470P-50 CH
C501	87-010-549-049		CAP,E 47-6.3 GAS
C502	87-010-196-089		C-CAP,S 0.1-25 F
C503	87-010-318-089		C-CAP,S 47P-50 CH
C505	87-010-313-089		C-CAP,S 18P-50 CH
C506	87-010-313-089		C-CAP,S 18P-50 CH
C507	87-010-197-089		C-CAP,S 0.01-25 B
C508	87-010-178-089		C-CAP,S 1000P-50 B
C509	87-010-178-089		C-CAP,S 1000P-50 B
C510	87-010-178-089		C-CAP,S 1000P-50 B
C511	87-010-178-089		C-CAP,S 1000P-50 B
C512	87-010-498-049		CAP,E 10-16 GAS
C513	87-010-498-049		CAP,E 10-16 GAS
C514	87-010-318-089		C-CAP,S 47P-50 CH
C515	87-010-318-089		C-CAP,S 47P-50 CH
C516	87-010-196-089		C-CAP,S 0.1-25 F
C599	87-010-196-089		C-CAP,S 0.1-25 F
C601	87-010-561-049		CAP,E 100-16 5L
C602	87-010-432-049		CAP,E 10-16 OS

REF. NO.	PART NO.	カンリ NO.	DESCRIPTION
C603	87-010-196-089		C-CAP,S 0.1-25 F
C604	87-010-196-089		C-CAP,S 0.1-25 F
C605	87-A10-222-049		CAP,E 22-10 OS
C606	87-010-196-089		C-CAP,S 0.1-25 F
C607	87-012-140-089		C-CAP,S 470P-50 CH
C608	87-010-196-089		C-CAP,S 0.1-25 F
J401	87-009-502-019		JACK,PIN 1PY EARTH
L101	87-005-781-089		C-COIL,47UH FLC32C
L201	87-005-781-089		C-COIL,47UH FLC32C
L202	87-005-781-089		C-COIL,47UH FLC32C
L301	87-005-781-089		C-COIL,47UH FLC32C
L302	87-005-781-089		C-COIL,47UH FLC32C
L303	87-005-781-089		C-COIL,47UH FLC32C
L401	87-005-196-089		COIL,10UH
L402	87-005-781-089		C-COIL,47UH FLC32C
L404	87-005-190-089		COIL,3.3UH
L405	87-005-189-089		COIL,2.7UH
L501	87-005-781-089		C-COIL,47UH FLC32C
L601	87-005-469-089		COIL,4.7UH
L602	87-A50-095-019		COIL,68UH
M201	87-045-305-019		MOTOR, RF-500TB
S101	87-036-109-019		SW,PUSH SPPB 61
S102	87-036-109-019		SW,PUSH SPPB 61
S201	87-A90-162-019		SW,SL 1-1-3 SSSU
X201	87-A70-027-089		VIB,XTAL 8MHZ 100PPM
X401	87-A70-026-089		VIB,XTAL 13.5MHZ 50PPM
X501	87-030-270-089		VIB,XTAL 16.9344MHZ

CD MECHA C.B<V3L,V4L,V5>

C101	87-010-154-089		C-CAP,S 10P-50 CH<EXCEPT V5>
C101	87-010-334-080		C-CAP,S 12P-50 CH<V5>
C102	87-010-193-089		C-CAP,S 0.033-25 F<V5>
C102	87-010-184-089		C-CAP,S 3300P-50 B<EXCEPT V5>
C103	87-010-197-089		C-CAP,S 0.01-25 B<EXCEPT V5>
C103	87-010-993-089		C-CAP,S 0.056-25<V5>
C104	87-010-193-089		C-CAP,S 0.033-25 F<EXCEPT V5>
C104	87-010-993-089		C-CAP,S 0.056-25<V5>
C105	87-010-197-089		C-CAP,S 0.01-25 B
C107	87-010-197-089		C-CAP,S 0.01-25 B<V5>
C107	87-010-182-089		C-CAP,S 2200P-50 B<EXCEPT V5>
C108	87-010-805-089		C-CAP,S 1-16F
C109	87-010-322-089		C-CAP,S 100P-50 CH
C110	87-010-198-089		C-CAP,S 0.022-25 B<EXCEPT V5>
C110	87-010-993-089		C-CAP,S 0.056-25<V5>
C111	87-010-551-089		CAP ELECT 33-10V SRE<EXCEPT V5>
C111	87-010-499-049		CAP,E 22-6.3 GAS<V5>
C112	87-010-322-089		C-CAP,S 100P-50 CH
C113	87-010-196-089		C-CAP,S 0.1-25 F
C114	87-010-197-089		C-CAP,S 0.01-25 B
C115	87-010-196-089		C-CAP,S 0.1-25 F<EXCEPT V5>
C115	87-012-141-089		C-CAP,S 0.22-16 F<V5>
C116	87-010-182-089		C-CAP,S 2200P-50 B
C117	87-010-196-089		C-CAP,S 0.1-25 F<EXCEPT V5>
C117	87-012-141-089		C-CAP,S 0.22-16 F<V5>
C118	87-010-196-089		C-CAP,S 0.1-25 F
C119	87-010-193-089		C-CAP,S 0.033-25 F<V5>
C119	87-010-196-089		C-CAP,S 0.1-25 F<EXCEPT V5>
C120	87-010-549-089		CAP ELECT 47-6.3V
C121	87-010-549-089		CAP ELECT 47-6.3V
C122	87-010-495-089		CAP,E 2.2-35 5L<V5>
C122	87-010-497-089		CAP,E 4.7-35 5L<EXCEPT V5>
C123	87-010-549-089		CAP ELECT 47-6.3V
C125	87-010-553-089		CAP,E 47-16
C127	87-010-553-089		CAP,E 47-16
C127	87-010-549-089		CAP,E 47-6.3 GAS
C128	87-010-549-089		CAP ELECT 47-6.3V
C129	87-010-182-089		C-CAP,S 2200P-50 B
C131	87-010-196-089		C-CAP,S 0.1-25 F
C133	87-010-196-089		C-CAP,S 0.1-25 F
C134	87-010-196-089		C-CAP,S 0.1-25 F
C135	87-010-196-089		C-CAP,S 0.1-25 F
C136	87-010-197-089		C-CAP,S 0.01-25 B
C137	87-010-805-089		C-CAP,S 1-16F
C138	87-010-178-089		C-CAP,S 1000P-50 B
C140	87-010-805-089		C-CAP,S 1-16F<EXCEPT V5>
FC4	85-NFT-611-119		FF-CABLE,16P-1.0
M101	87-045-356-019		MOT,RF-310T A 30
M102	87-045-358-019		MOT,RF-310T A 43
R140	87-022-364-089		C-RES,S82K-1/10WF
R141	87-022-363-089		C-RES,S 68K-1/10W F
R142	87-022-363-089		C-RES,S 68K-1/10W F
R143	87-022-363-089		C-RES,S 68K-1/10W F
R144	87-022-363-089		C-RES,S 68K-1/10W F
R145	87-022-364-089		C-RES,S82K-1/10WF
SFR101	87-024-175-089		SFR,47K DIA6 V
SFR102	87-024-176-089		SFR,100K DIA6 V
SFR103	87-024-175-089		SFR,47K DIA6 V
SW101	87-036-340-019		SW,LEAF LSA-1121

T-T C.B

C401	87-018-214-089		CAP TC U 0.1-50 F
FC401	84-ZG1-614-119		CABLE FFC 5P-1.25
M401	87-045-364-019		MOTOR,(BCH3B14)
PS401	87-026-573-019		P-SNSR,GP1S53V

LED C.B<F>

LED101	87-070-200-089		LED,SLP636C-81-S-T1<F>
LED102	87-017-350-080		LED,SEL1550CM<F>
LED103	87-017-350-080		LED,SEL1550CM<F>
LED104	87-070-200-089		LED,SLP636C-81-S-T1<F>

VCD C.B<V3L>

C2	87-010-378-010		CAP,E 10-16
C3	87-010-378-010		CAP,E 10-16
C4	87-010-374-010		CAP,E 47-10
C5	87-010-374-010		CAP,E 47-10
C9	87-010-378-010		CAP,E 10-16
C10	87-010-378-010		CAP,E 10-16
C11	87-010-378-010		CAP,E 10-16
C12	87-010-374-010		CAP,E 47-10
C13	87-010-378-010		CAP,E 10-16
C17	87-010-248-010		CAP,E 220-10
C22	87-010-374-010		CAP,E 47-10
C23	87-010-374-010		CAP,E 47-10
C32	87-010-378-010		CAP,E 10-16
C47	87-010-248-010		CAP,E 220-10
C49	87-010-378-010		CAP,E 10-16
C52	87-010-248-010		CAP,E 220-10
C101	87-010-378-010		CAP,E 10-16
L1	SL-AL0-4NA-100		COIL,10UH
L2	SL-AL0-4NA-472		COIL,4.7UH
X1	SS-KY4-05M-000		X'TAL,40.5MHz
X2	SS-KY4-M00-000		X'TAL,4MHz
X3	SS-KY4-433-616		X'TAL,4.433616MHz

VCD C.B<V4L>

C13	87-010-367-080		CAP,E 4.7-25V(5ECEC1)
C38	87-010-075-040		CAP,E 10-16V(5ECEC1)
C40	87-010-549-010		CAP,E 47-6.3V(5ECEC0)
C44	87-010-549-010		CAP,E 47-6.3V(5ECEC0)
C47	87-010-549-010		CAP,E 47-6.3V(5ECEC0)
C48	87-010-549-010		CAP,E 47-6.3V(5ECEC0)
C51	87-010-549-010		CAP,E 47-6.3V(5ECEC0)
C54	87-010-549-010		CAP,E 47-6.3V(5ECEC0)
C56	87-010-076-810		CAP,E 22-6.3V(5ECEC0)
C58	87-010-076-810		CAP,E 22-6.3V(5ECEC0)
C81	87-016-155-010		CAP,E 1000-6.3V5ECER0)
C128	87-010-549-010		CAP,E 47-6.3V(5ECEC0)
C133	87-010-053-810		CAP,E 1-50V(5ECEC1)
C150	87-010-075-040		CAP,E 10-16V(5ECEC1)

REF. NO.	PART NO.	カンリ NO.	DESCRIPTION
C151	87-010-549-010		CAP,E 47-6.3V(5ECEC0)
C152	87-016-155-010		CAP,E 1000-6.3V5ECER0)
C157	87-010-075-040		CAP,E 10-16V(5ECEC1)
CT1	S2-130-007-010		CAP,TRIMMER 30PF(5ECT04)
L1	S7-001-XXX-100		C-COIL,47UH(5ELQE4)
X1	S0-120-003-010		X'TAL,12.0000MHZ(5EXMA4)
X2	S0-177-343-010		X'TAL,17.73447MHZ(5EXMA4)

SUB C.B<V3L>

DRIVE C.B<WR>

M1	87-045-358-019		MOT,RF-310TA 43
M2	87-045-356-019		MOT,RF-310TA 30
SW1	87-A90-042-019		SW,LEAF MSW 17310 MVPO

○ チップ抵抗部品コード／CHIP RESISTOR PART CODE

チップ抵抗部品コードの成り立ち
Chip Resistor Part Coding

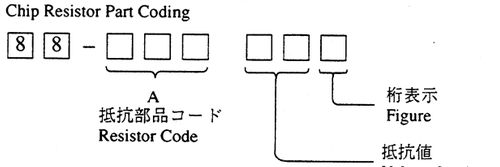

チップ抵抗
Chip resistor

容量 Wattage	種類 Type	許容誤差 Tolerance	記号 Symbol	寸法／Dimensions (mm) 外形／Form	L	W	t	抵抗コード ：A Resistor Code: A
1／16W	1608	±5%	CJ	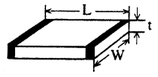	1.6	0.8	0.45	108
1／10W	2125	±5%	CJ		2	1.25	0.45	118
1／8W	3216	±5%	CJ		3.2	1.6	0.55	128

IC BLOCK DIAGRAM

IC, NJM2244L

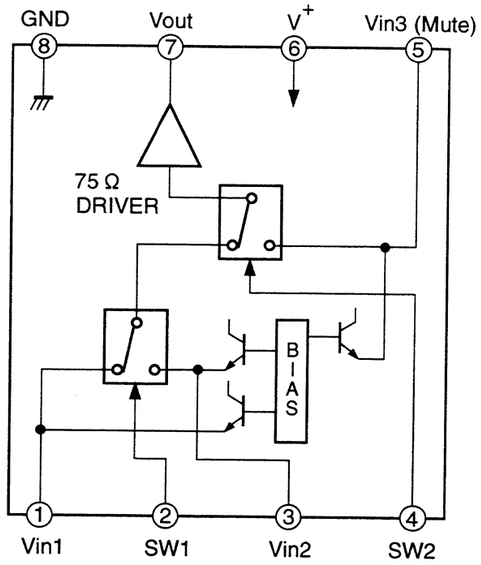

SW1	SW2	OUTPUT SIGNAL
L	L	Vin1
H	L	Vin2
L/H	H	Vin3

IC, LA6530

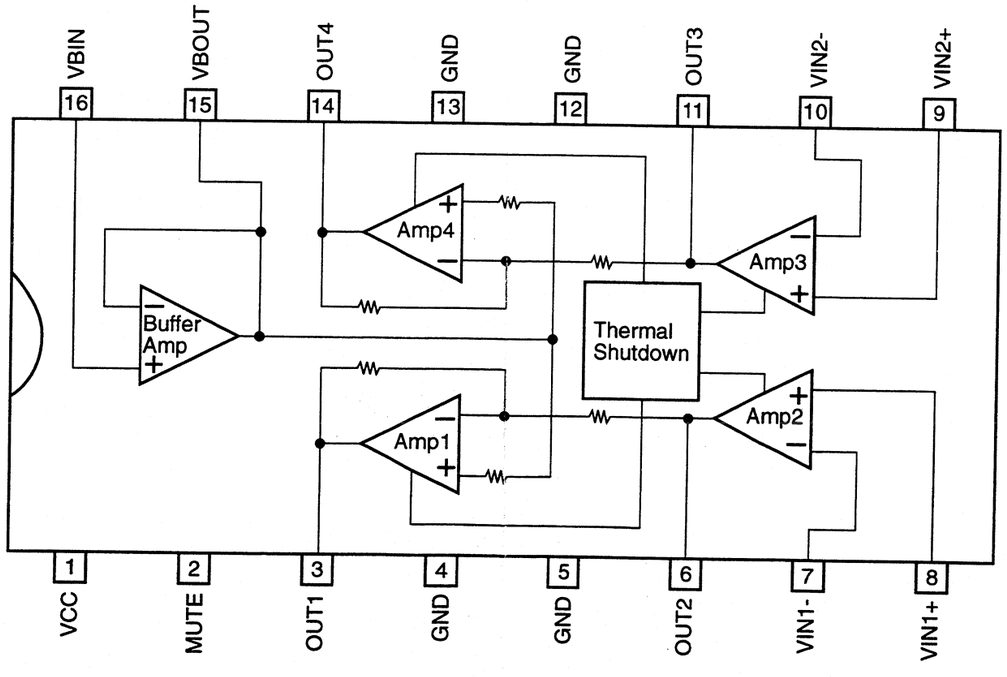

BLOCK DIAGRAM-1 (V3L: MAIN VCD ／ CD MECHA)

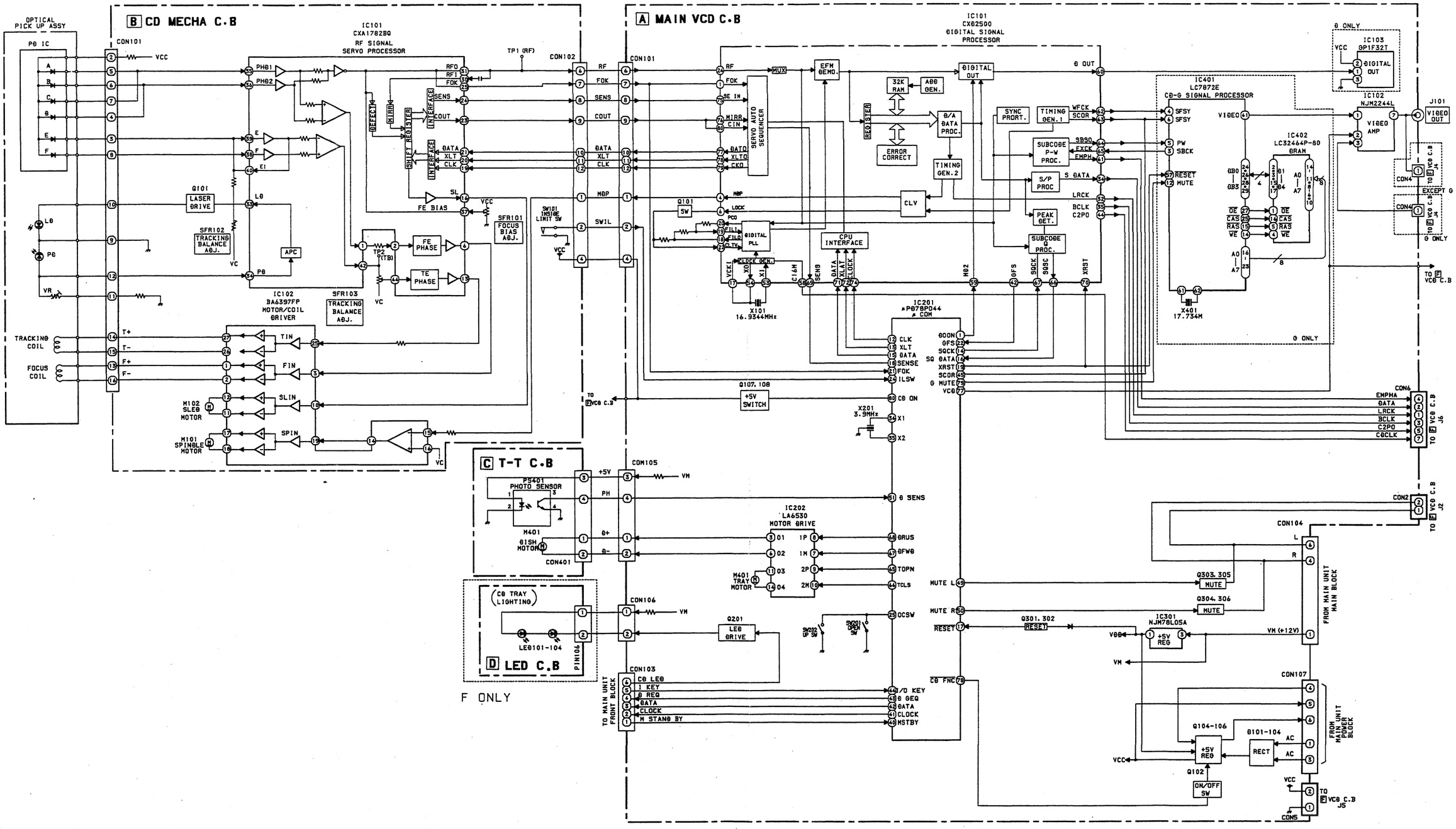

BLOCK DIAGRAM-2 (V3L: VCD)

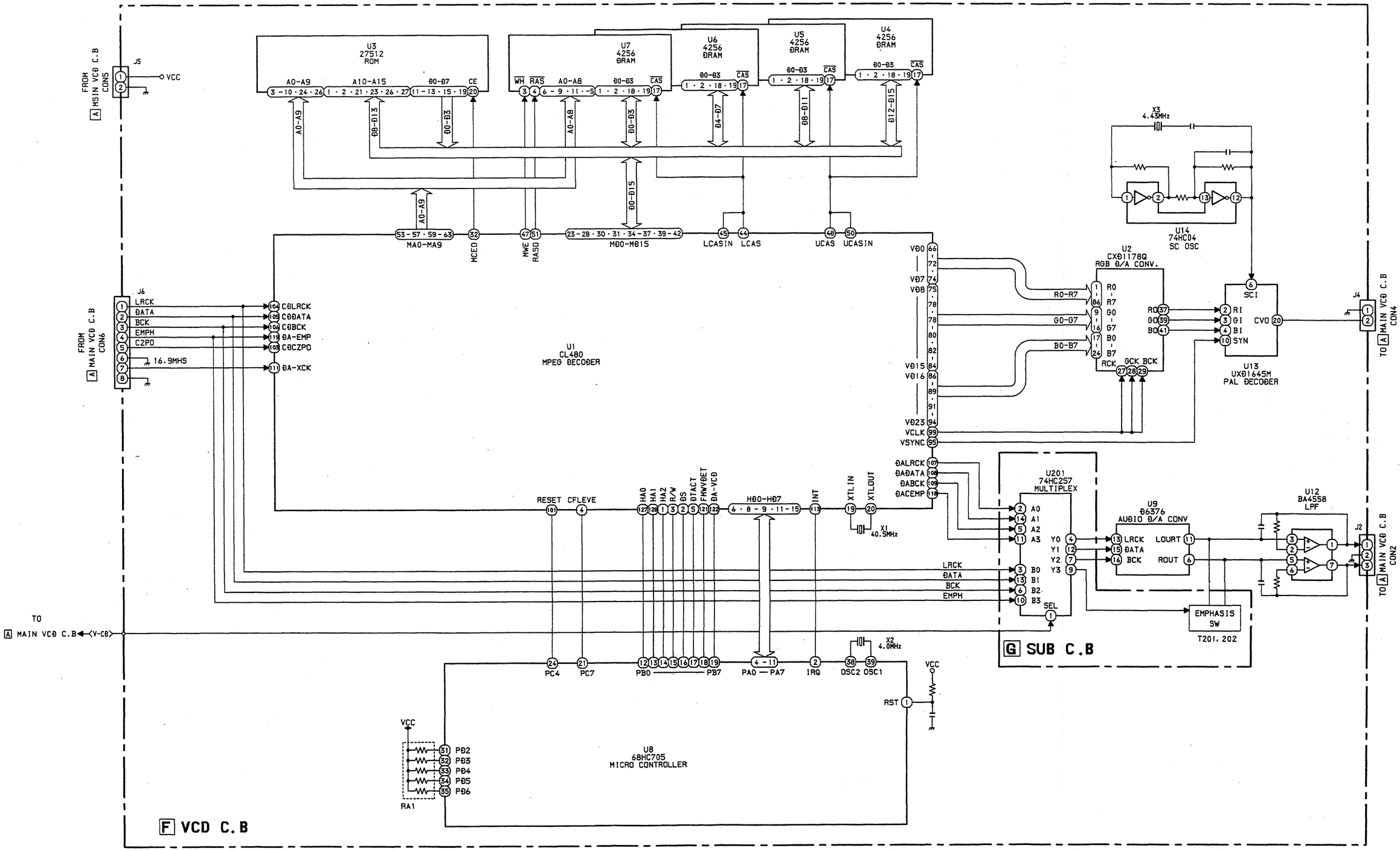

BLOCK DIAGRAM-3 (V4L: MAIN VCD ／ CD MECHA)

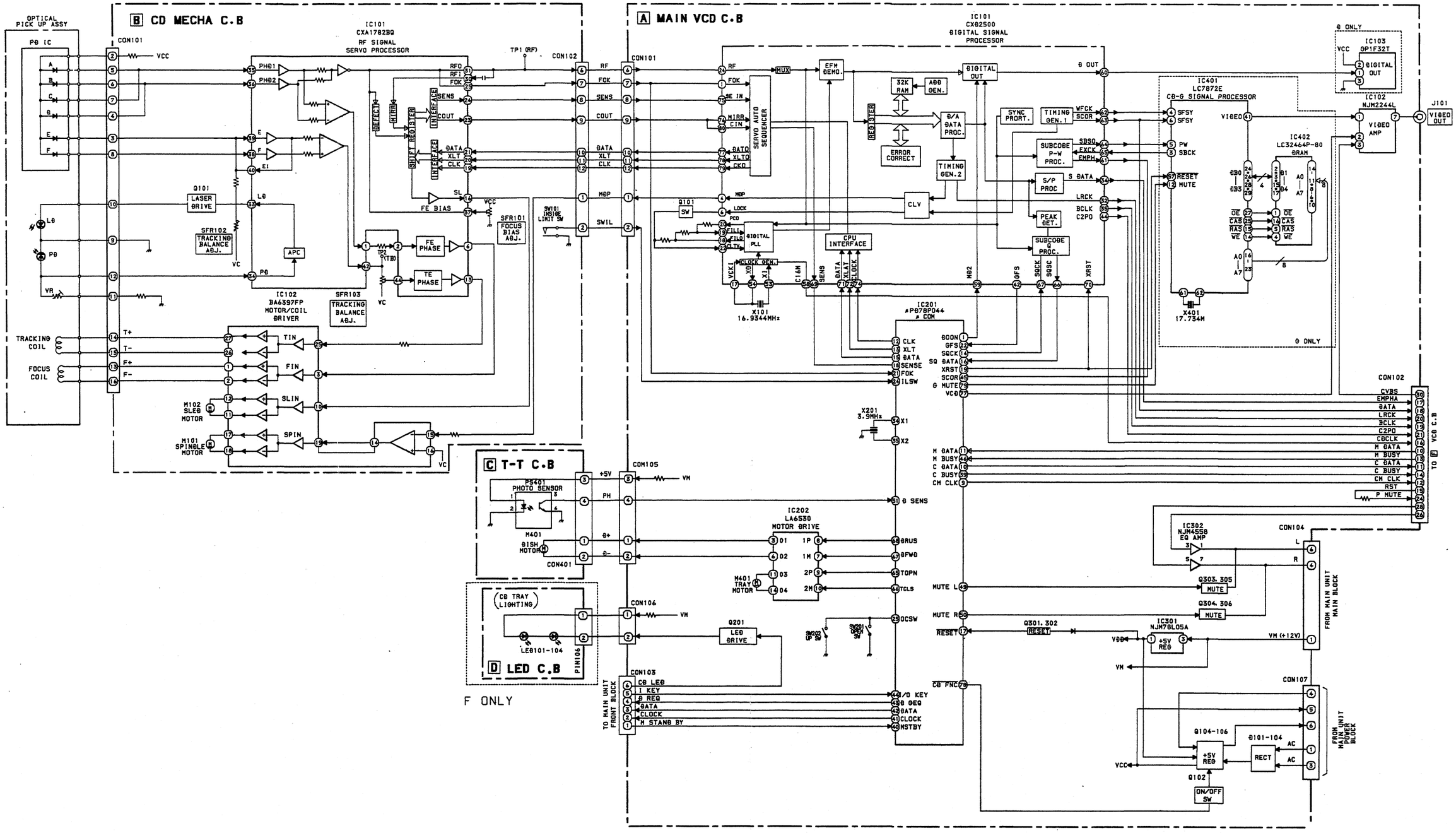

BLOCK DIAGRAM-4 (V4L: VCD)

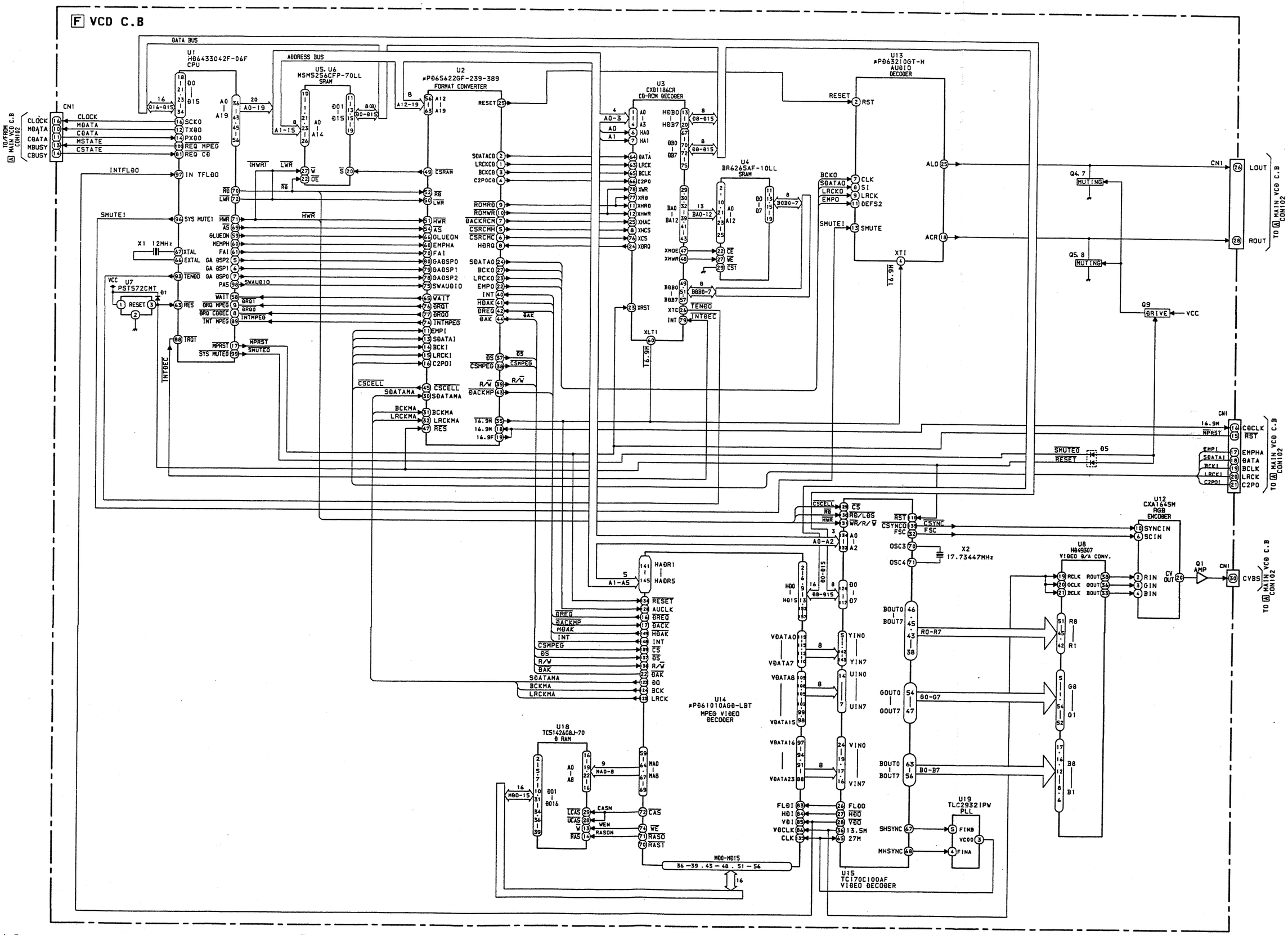

BLOCK DIAGRAM-5 (V5)

PICK UP KSM-213B

Q101 APC

PB VC

A, B, C, D E, F

FOCUS TRACKING SPINDLE SLED OUT (+) (-)

IC102 BA6891FP MOTOR, COIL DRIVER

LD

FEO TAO SLO

MDP

CON101

RF FOK SENS C.OUT

DATA XLAT CLK

CXA1782BQ RF AMP + SERVO SIGNAL PROCESSOR

IC101 CXD2500BQ DIGITAL SIGNAL PROCESSOR

5V IC102 PQ05RF11 5V REGULATOR

3.3V IC304 PQ05TZ53 3.3V REGULATOR

6V Q601, 602 D601, 602, 603 DC/DC CONVERTER 12V→6V

VM (12V) CON103

L-CH R-CH

Q501, 502, D501 AUDIO MUTE

L-OUT R-OUT

IC501 SM5877AM AUDIO DAC

CKO (16.9344MHz)

16.9344MHz

DEMP BCK PCMD LRCK

SFR101:F.B ADJ. SFR102:T.B ADJ. SFR103:T.G ADJ.

Q102, 103 LD (POWER) ON/OFF SW

LDON

CLOCK SQCK XRST XLAT DATA DMUTE

SQSO SENS

SBSO SCOR WFCK EMPH C2PO BCK DATA LRCK

EXCK DAXCLK

FOK

IC202 PST600DMT RESET IC

RST

NTSC PAL PAL60 SW

TVMSW

ILSW

IC201 MB89627 μ-COM

XVCDRST (BV1)

INTRPT (BV2)

BM0 ~ BM7

A13 ~ A15 ALE RD WR

IC205 IC206 IC207 MPEG SIGNAL TIMING GENERATOR

XDS XWRITE XDTACK

IC301 CL484 C-CUBE MPEG DECODER

MA0 ~ MA9

IC303 LH5317XX 512K ROM

MD0 ~ MD13

RAS0 UCASIN UCAS MWE LCASIN LCAS MA0 ~ MA8

IC302 HM514260 4M DRAM

MD0 ~ MD15

I/O BUSY

O-SD

O-CLK

I-SD

CON102

I-DISH.S

PS151 GP1S53V TURN TABLE SENSOR

I-SW

S101 OPEN/CLOSE S102 UP/DOWN SW

O-CLOSE O-OPEN O-DISH-R O-DISH-S

IC103 LB1644 TRAY, TURN TABLE DRIVER

M401 TURN TABLE MOTOR

TRAY MOTOR

BM0 ~ BM7

A8 ~ A12

8.00MHzx

IC204 BR6265BF-NIOSL 64K SRAM

IC203 74HC373 ADDRESS TIMING GENERATOR

A0 ~ A7

A0 ~ A2

F01 F02

IC402 BU2173F CLOCK GENERATOR

F01 40.5MHz (MPEG)

F02 27.0MHz (VCD)

28.636MHz (NTSC)

28.375MHz (PAL)

13.5MHz

VCD/CDG XNTSC

VIDEO OUT

HSYNC VSYNC

B0 ~ B7

G0 ~ G7

R0 ~ R7

ENCRST VCD/CDG XNTSC PAL/PAL60

IC401 BU1417K VIDEO DAC + RGB ENCODER

C OUT

Y OUT

VCD/CDG

Q402, 403 Y SIGNAL BAND SWITING

TO MAIN VCO C.B CON102

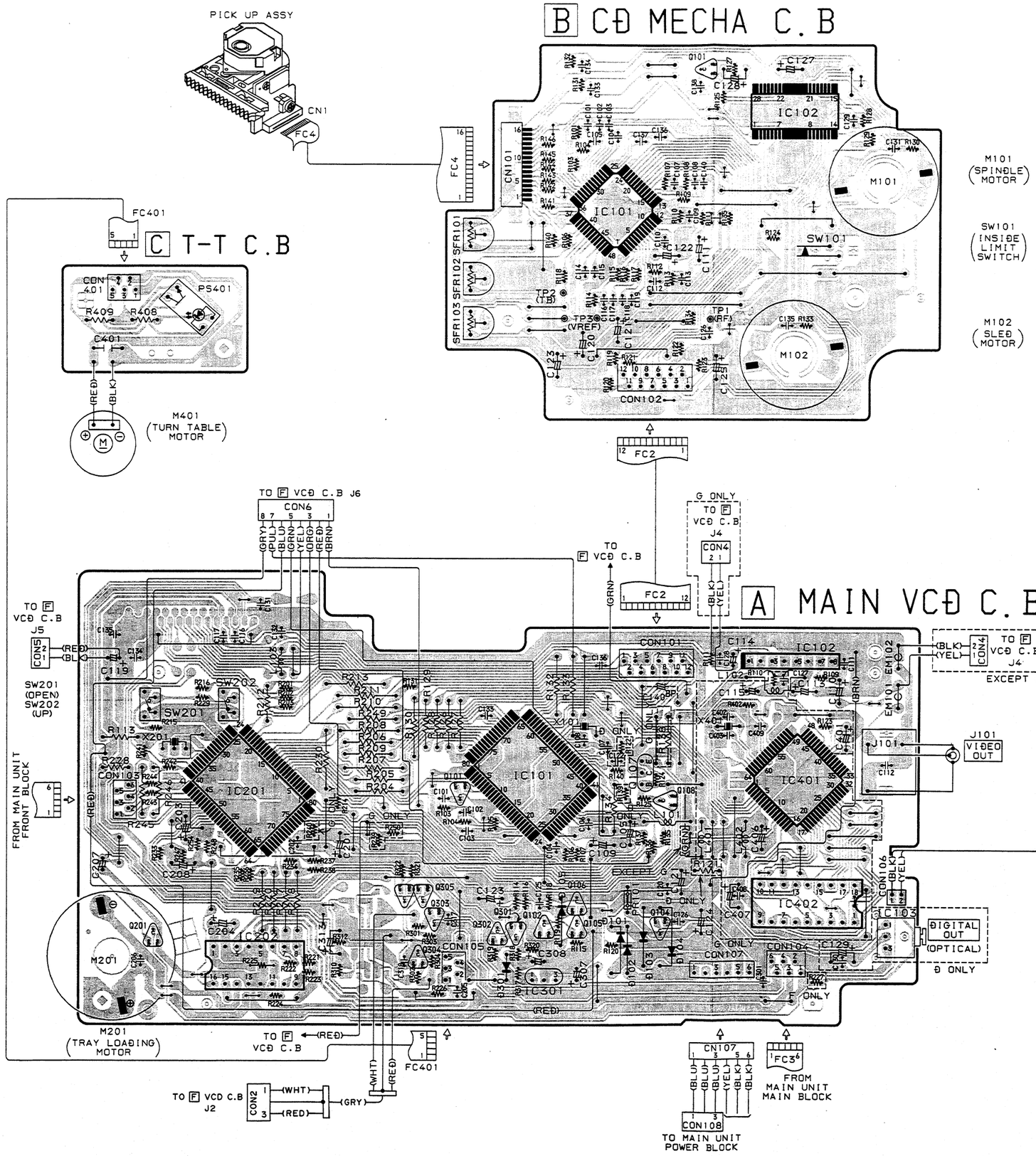
B CD MECHA C.B
PICK UP ASSY
CN1
FC4
M101 (SPINDLE MOTOR)
SW101 (INSIDE LIMIT SWITCH)
M102 (SLED MOTOR)
IC101
IC102
SW101
M101
M102
CON102
FC2
C T-T C.B
FC401
CON401
PS401
R409
R408
C401
M401 (TURN TABLE MOTOR)
TO F VCD C.B J6
CON6
TO F VCD C.B
G ONLY
TO F VCD C.B J4
CON4
A MAIN VCD C.B
TO F VCD C.B J5
CON5
SW201 (OPEN) SW202 (UP)
SW201
SW202
FROM MAIN UNIT FRONT BLOCK
IC201
IC202
IC401
IC402
CON105
CON101
CON104
CON107
M201 (TRAY LOADING MOTOR)
TO F VCD C.B J2
CON2
FC401
CN107
FROM MAIN UNIT MAIN BLOCK
CON108
TO MAIN UNIT POWER BLOCK
J101 VIDEO OUT
DIGITAL OUT (OPTICAL)
D ONLY
F ONLY
D LED C.B
LED101-104 (CD TRAY LIGHTING)
PIN 106
LED 104
LED 103
LED 102
LED 101
EXCEPT G

CHEMATIC DIAGRAM-1 (V3L: CD MECHA)

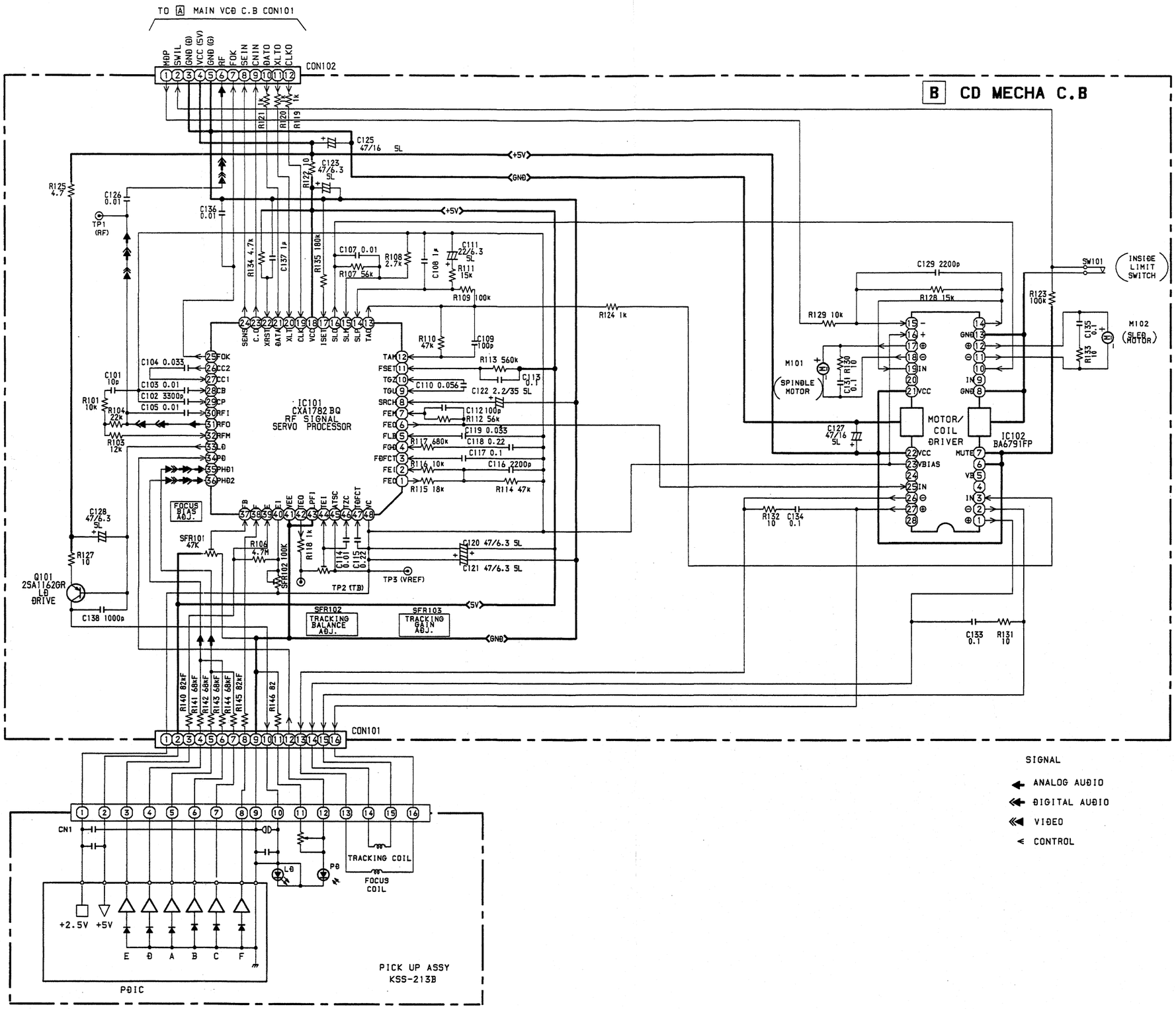

SCHEMATIC DIAGRAM-2 (V3L: MAIN VCD)

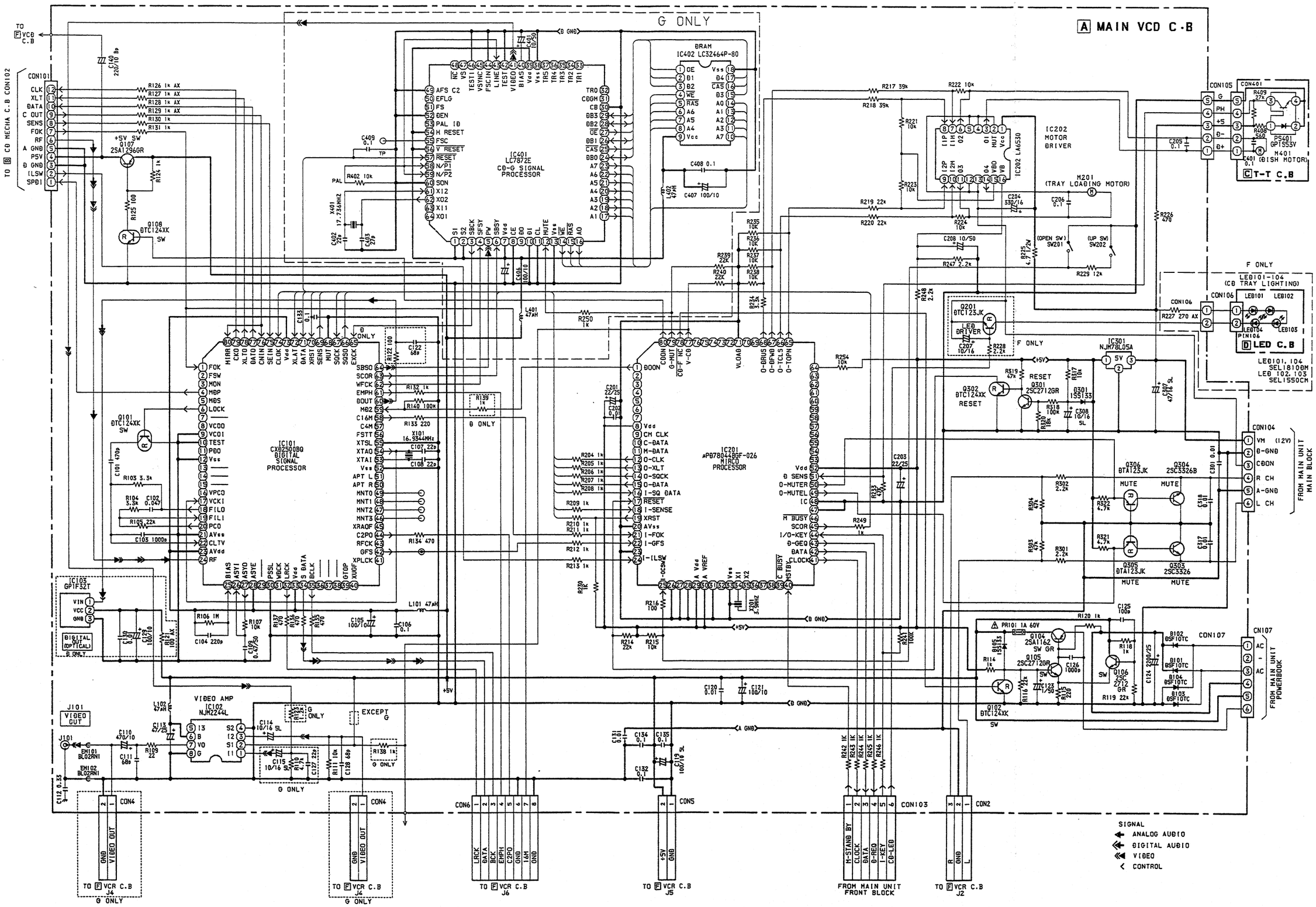

SCHEMATIC DIAGRAM-3 (V3L: VCD)

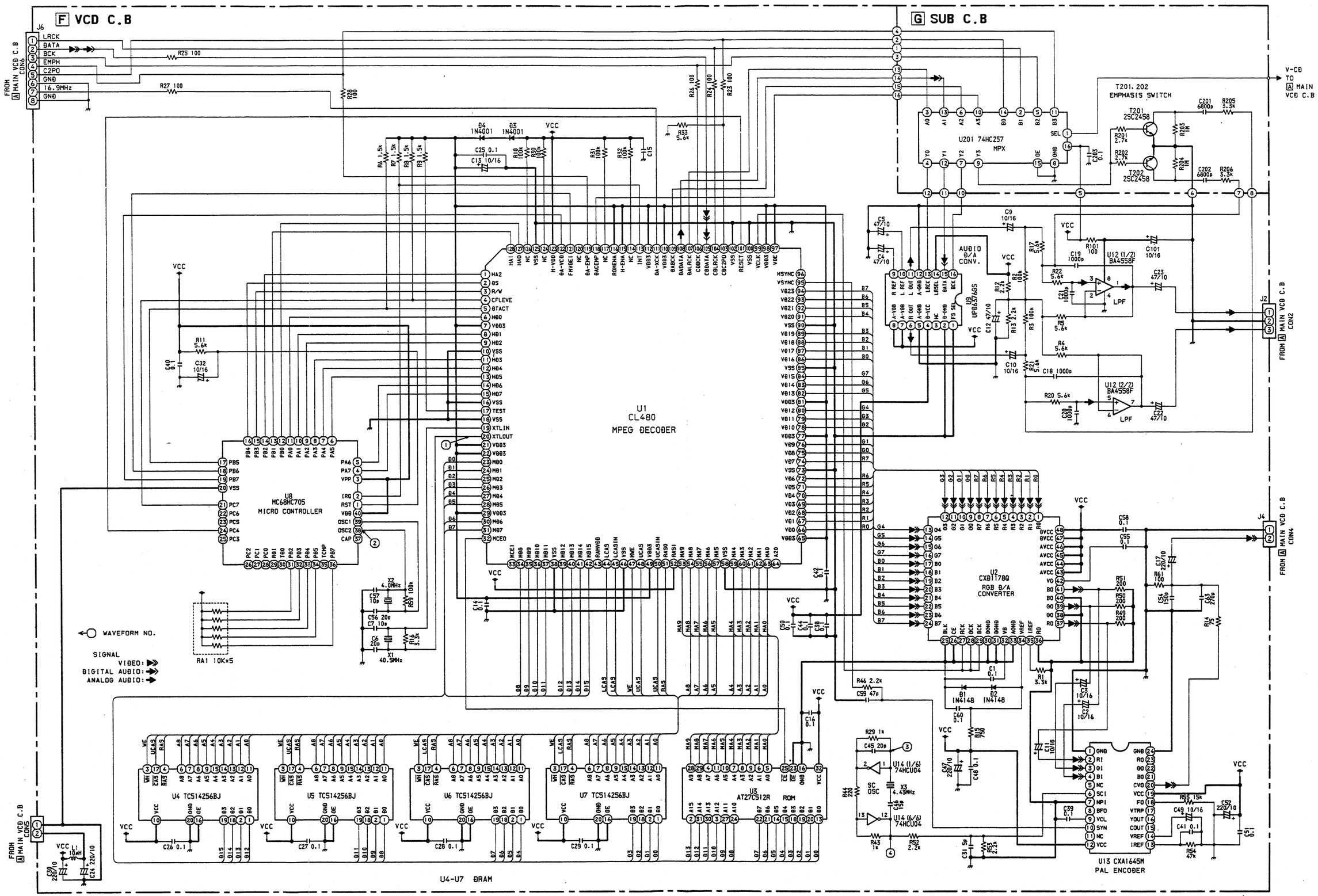

WIRING-2 (V3L: VCD)

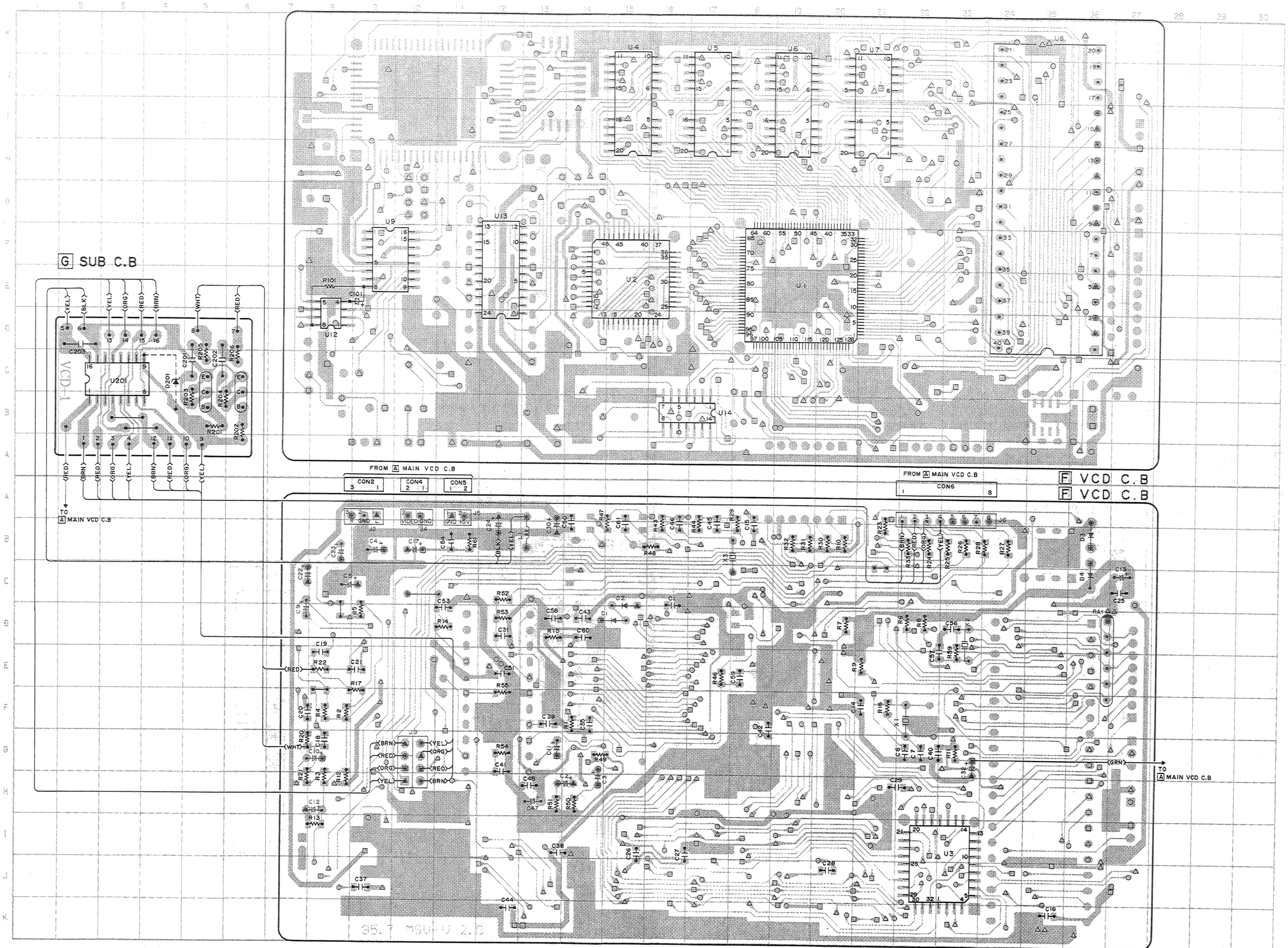

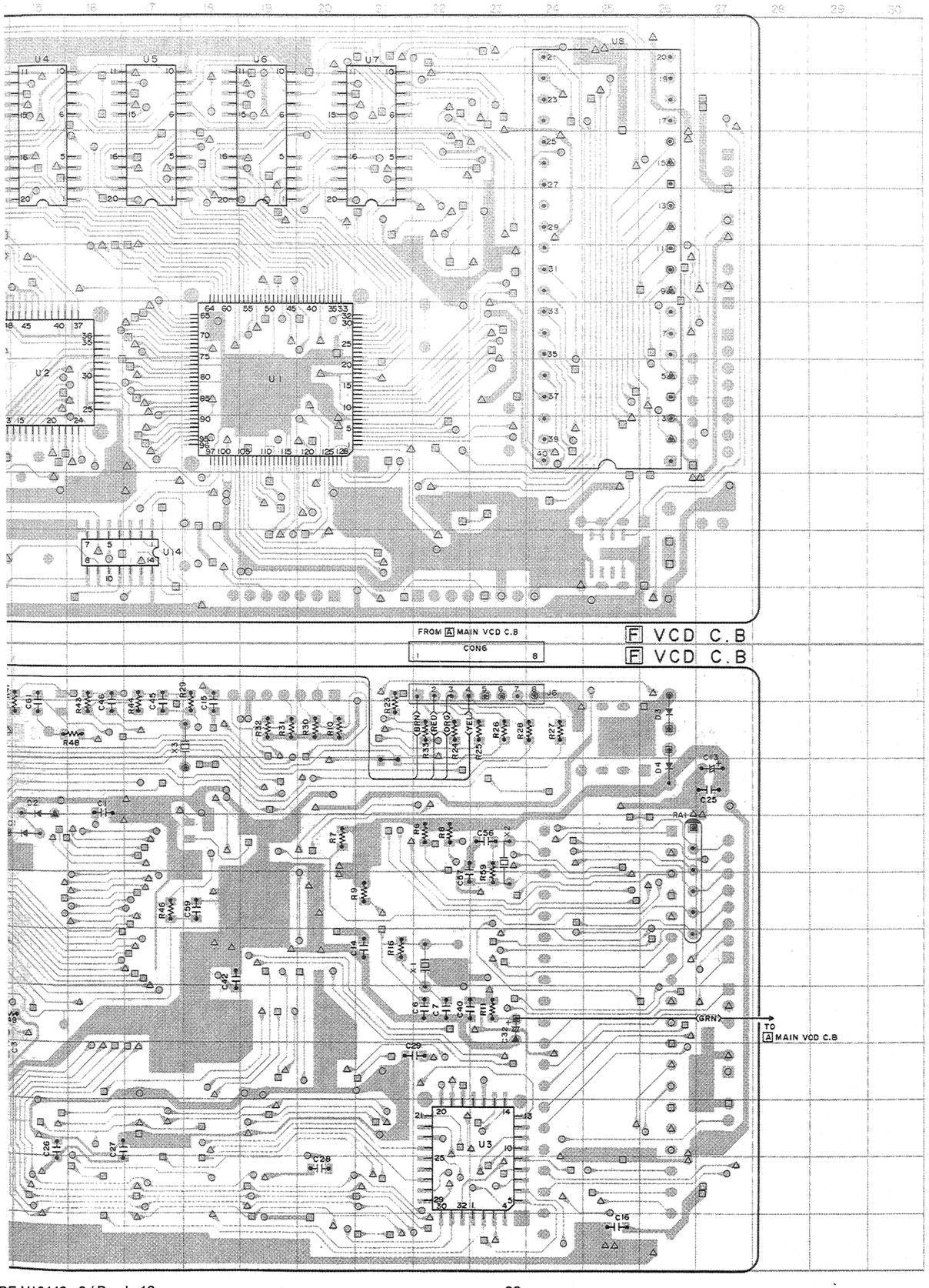

WAVE FORM

① U1 Pin ⑳ (XLT OUT)

VOLT/DIV: 1V
TIME/DIV: 10nS

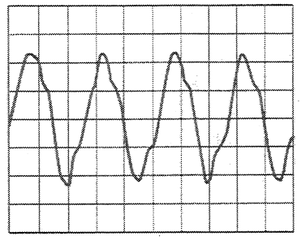

② U8 Pin ㊳ (OSC2)

VOLT/DIV: 1V
TIME/DIV: 100nS

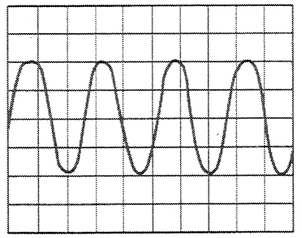

③ U14 Pin ①

VOLT/DIV: 1V
TIME/DIV: 100nS

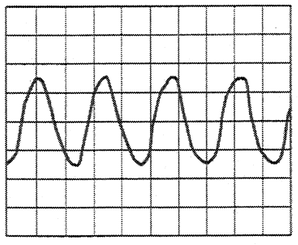

④ U14 Pin ⑫

VOLT/DIV: 1V
TIME/DIV: 100nS

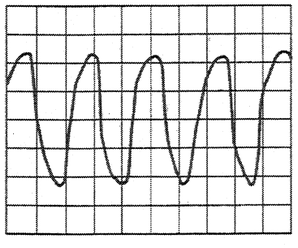

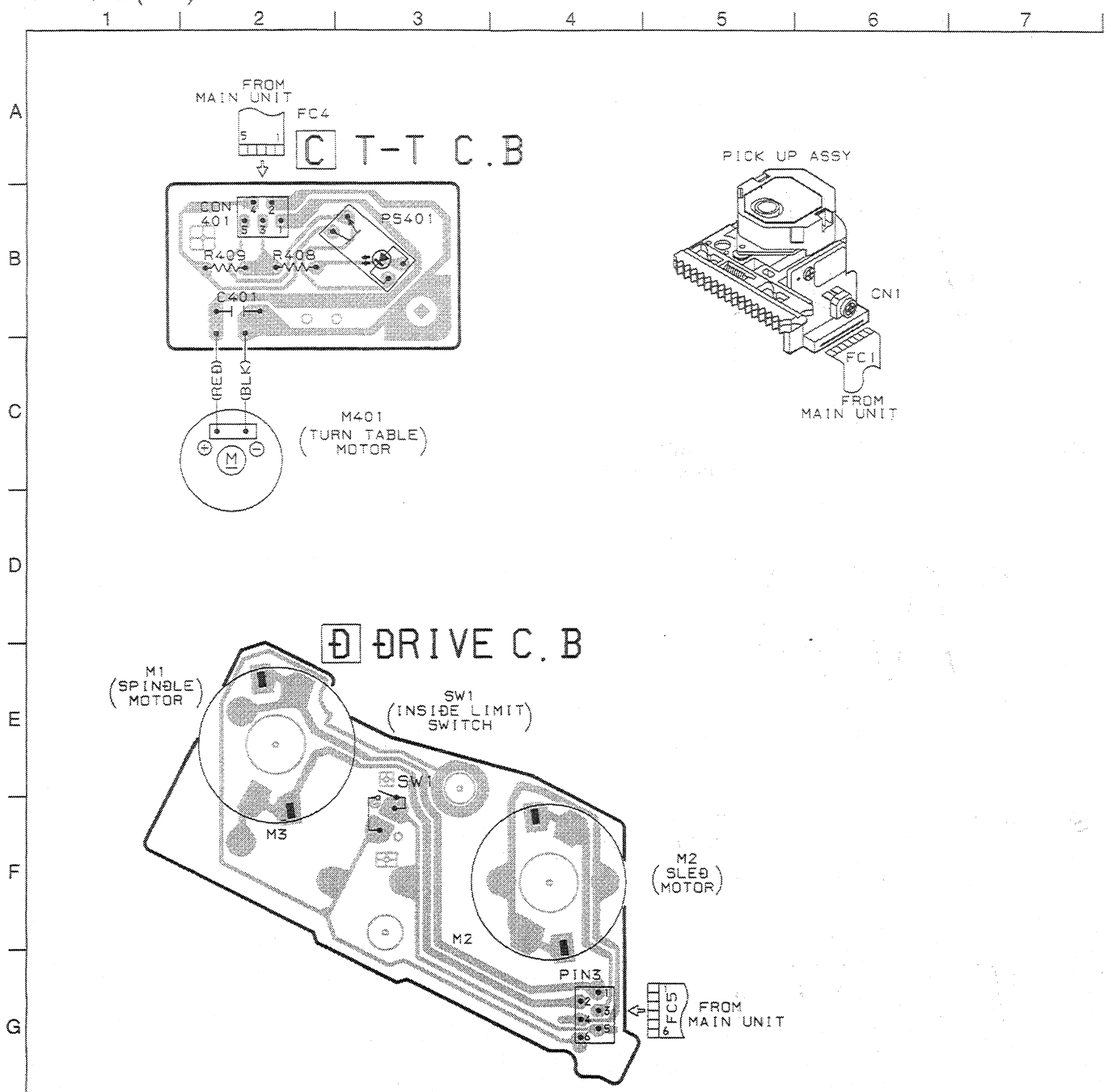

SCHEMATIC DIAGRAM-4 (WR)

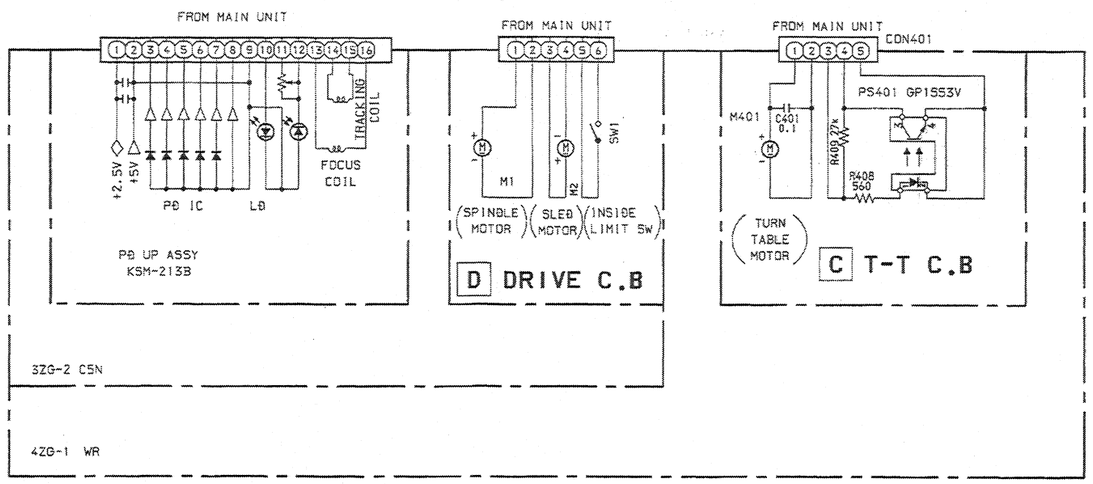

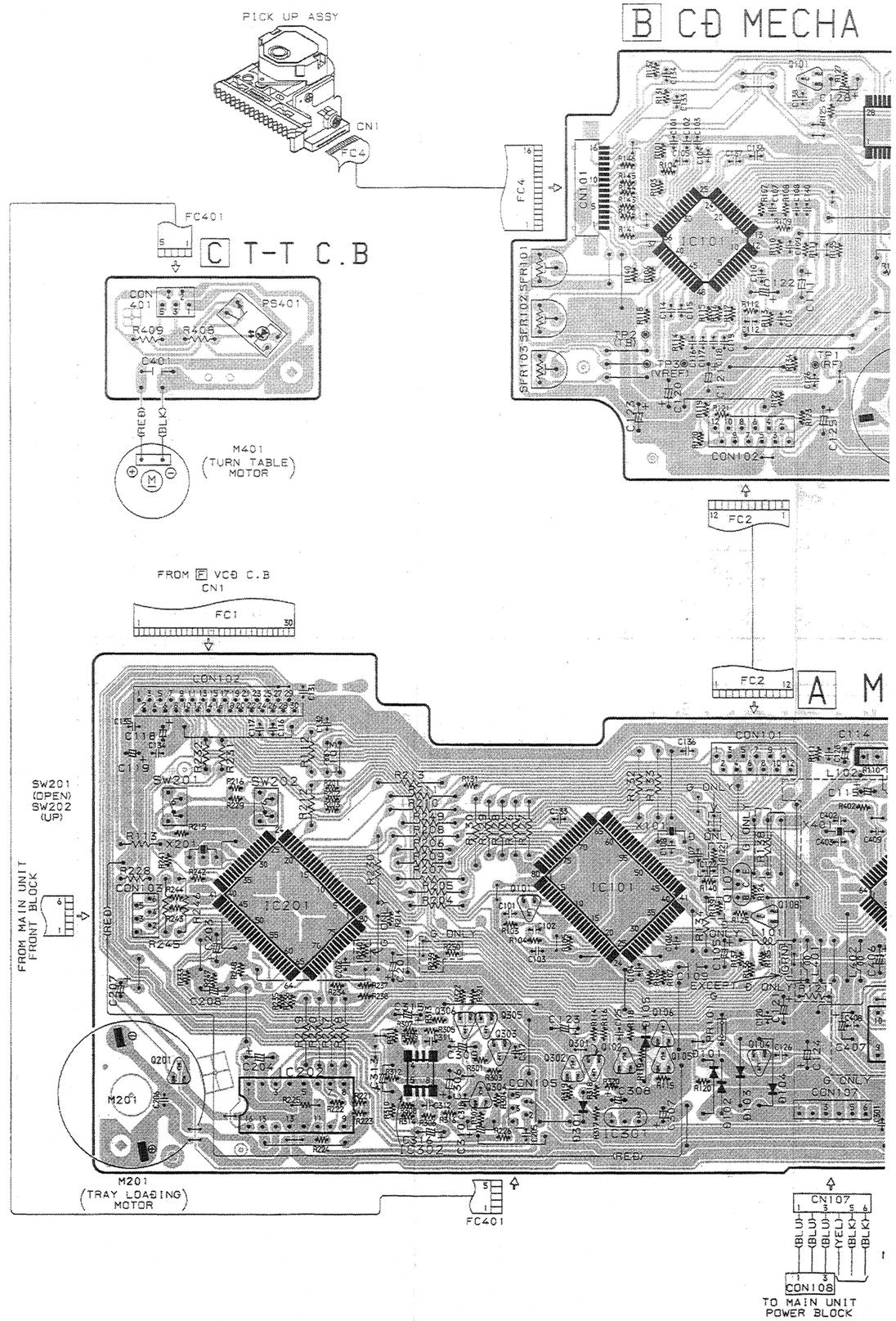

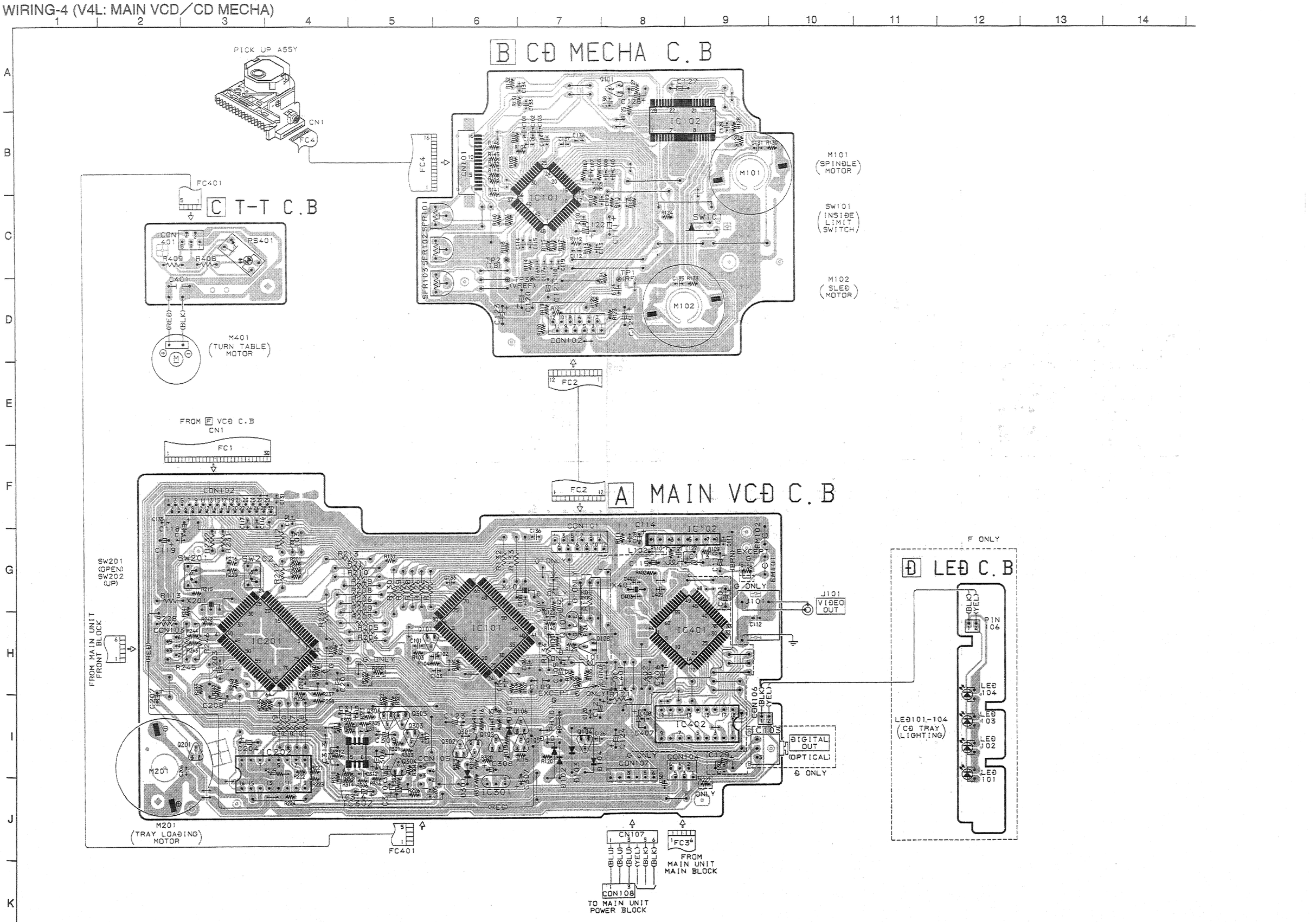
PICK UP ASSY
CN1
FC4
B CD MECHA C.B
FC4
CN101
IC101
IC102
Q101
M101
(SPINDLE MOTOR)
SW101
(INSIDE LIMIT SWITCH)
M102
(SLED MOTOR)
SFR101
SFR102
SFR103
TP1 (RF)
TP2 (VREF)
CON102
FC2
FC401
C T-T C.B
CON401
PS401
R409
R408
C401
(RED)
(BLK)
M401
(TURN TABLE MOTOR)
FROM F VCD C.B
CN1
FC1
A MAIN VCD C.B
CON102
CON101
IC201
IC101
IC401
IC202
IC402
IC301
IC502
IC103
SW201
(OPEN)
SW202
(UP)
FROM MAIN UNIT FRONT BLOCK
M201
(TRAY LOADING MOTOR)
FC401
J101
VIDEO OUT
DIGITAL OUT
(OPTICAL)
D ONLY
F ONLY
D LED C.B
LED101-104
(CD TRAY LIGHTING)
PIN 106
LED 104
LED 103
LED 102
LED 101
CN107
FC3
FROM MAIN UNIT MAIN BLOCK
CN108
TO MAIN UNIT POWER BLOCK

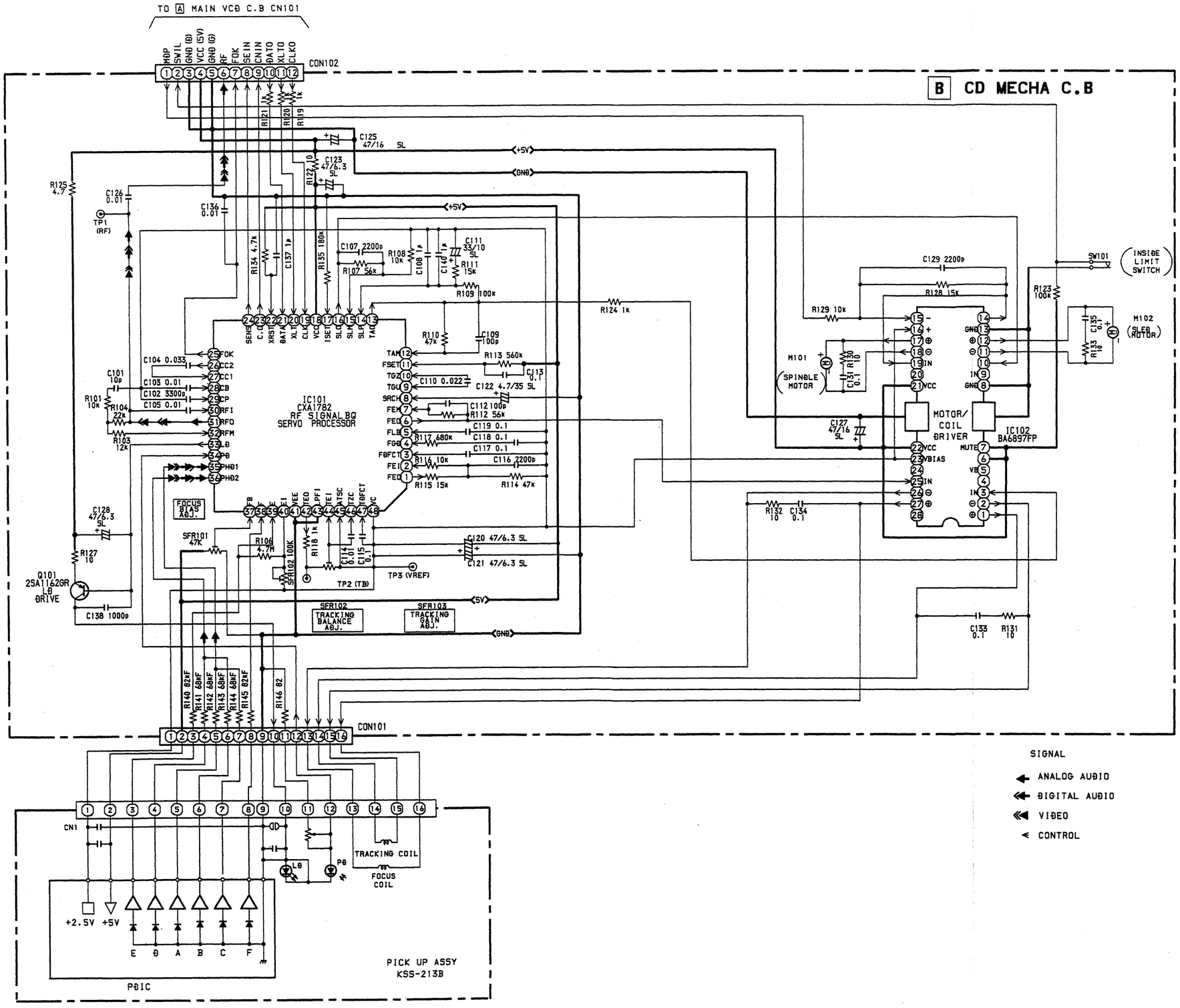
TO A MAIN VCD C.B CN101
CON102
B CD MECHA C.B
IC101
CXA1782
RF SIGNAL BD
SERVO PROCESSOR
IC102
BA6897FP
MOTOR/
COIL
DRIVER
M101
SPINDLE
MOTOR
M102
SLED
MOTOR
SW101
INSIDE
LIMIT
SWITCH
FOCUS
BIAS
ADJ.
SFR101
47K
SFR102
TRACKING
BALANCE
ADJ.
SFR103
TRACKING
GAIN
ADJ.
Q101
2SA1162GR
L-D
DRIVE
TP1
(RF)
TP2 (TE)
TP3 (VREF)
+5V
GND
CON101
CN1
TRACKING COIL
FOCUS
COIL
L-D
P-D
+2.5V
+5V
E
F
A
B
C
D
PICK UP ASSY
KSS-213B
P-IC
SIGNAL
ANALOG AUDIO
DIGITAL AUDIO
VIDEO
CONTROL

SCHEMATIC DIAGRAM-6 (V4L: MAIN VCD)

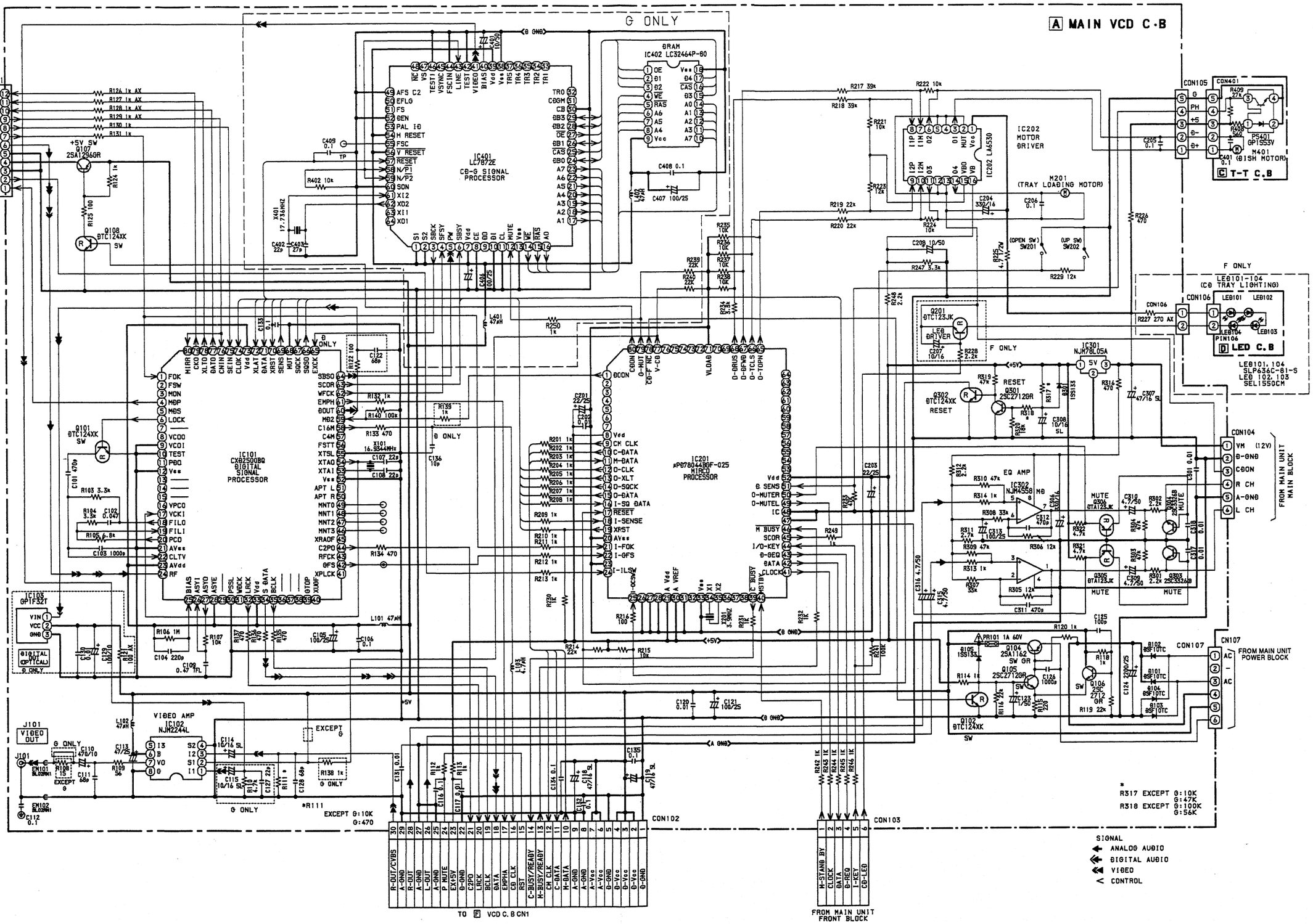

F VCD C.B (1/2)

U14
MPB61D10AGB-LBD
VIDEO DECODER

U18
TC514260BJ-70
16-bit DRAM

U15
TC170C100AF
VIDEO DECODER

U8
HB49307
3HC 8-bit DAC

U12
CXA1645M
RGB ENCODER

U19
TLC2932IPW
PLL

Q1
2SC4081
AMP

TO/FROM VCD C.B (2/2)

FROM VCD C.B (2/2) 16.9M

TO VCD C.B (2/2) INTFLBO, SBATAMA, BCKMA, LRCKMA

TO/FROM VCD C.B (2/2) CSCELL, HWR, RD, RESET, A2, A1, A0, B8, B9, B10, B11, B12, B13, B14, B15

TO A MAIN VCD C.B CON102 CVBS 0D

FROM A MAIN VCD C.B CON102 EMPHA, DATA, BCLK, LRCK, C2PO, CDATA, MBUSY, CBUSY

WAVE FORM NO.
SIGNAL
VIDEO
CONTROL

GND SYMBOL
B GND
A GND

F VCD C.B (2/2)

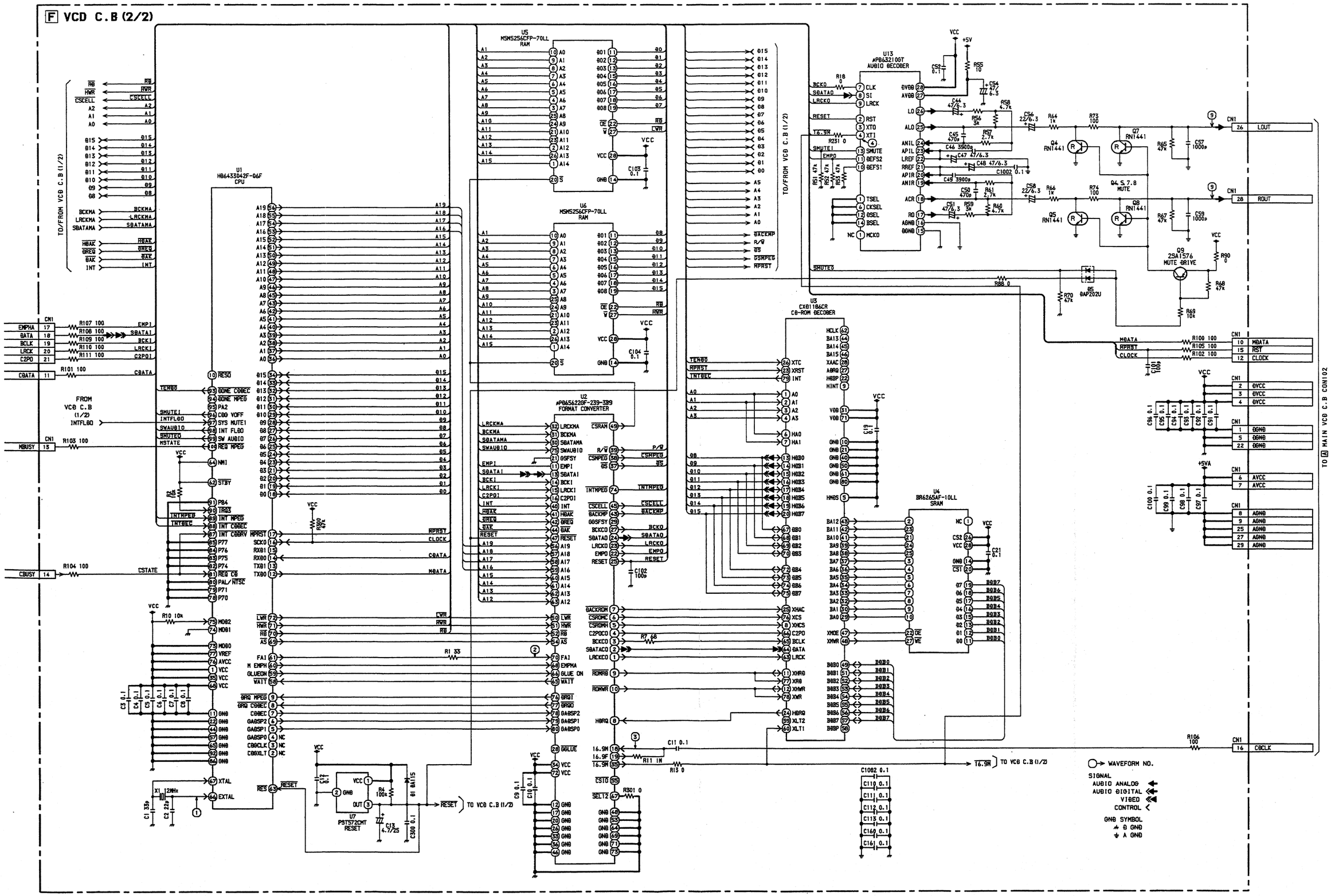
TO/FROM VCD C.B (1/2)
FROM VCD C.B (1/2)
U1 HB6433042F-06F CPU
U5 M5M5256CFP-70LL RAM
U6 M5M5256CFP-70LL RAM
U2 μPB65220F-239-3B9 FORMAT CONVERTER
U3 CXB1186CR CD-ROM DECODER
U13 μPB6321OGT AUDIO DECODER
U4 BR6265AF-10LL SRAM
U7 PST572CMT RESET
Q4 RN1441
Q5 RN1441
Q7 RN1441
Q8 RN1441
Q9 2SA1576 MUTE DRIVE
D5 BAP202U
04,5,7,8 MUTE
TO/FROM VCD C.B (1/2)
TO VCD C.B (1/2)
TO A MAIN VCD C.B CON102
WAVEFORM NO.
SIGNAL
AUDIO ANALOG
AUDIO DIGITAL
VIDEO
CONTROL
GND SYMBOL
θ GND
A GND

WAVE FORM

① U1 Pin ㊻ (EXTAL) VOLT/DIV: 1V TIME/DIV: 20nS

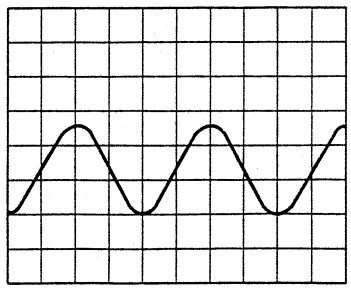

③ U2 Pin ⑱ (16.9M) VOLT/DIV: 1V TIME/DIV: 20nS

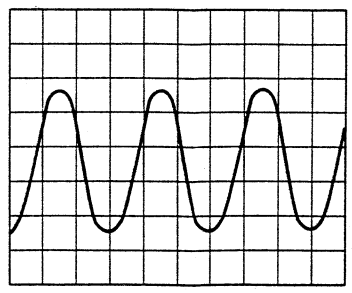

⑤ U12 Pin ⑥ (SC IN) VOLT/DIV: TIME/DIV:

GND

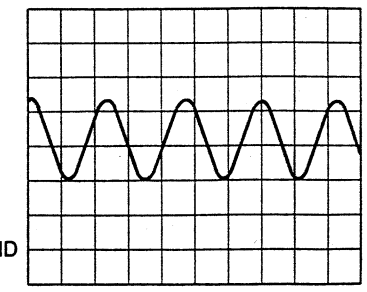

② U2 Pin ⑳ (FAI) VOLT/DIV: 1V TIME/DIV: 20nS

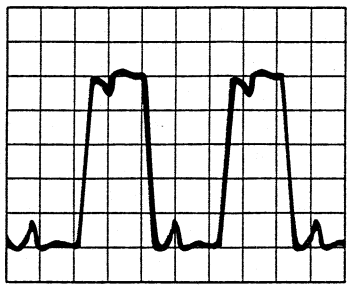

④ U13 Pin ④ (XTI) VOLT/DIV: 1V TIME/DIV: 20nS

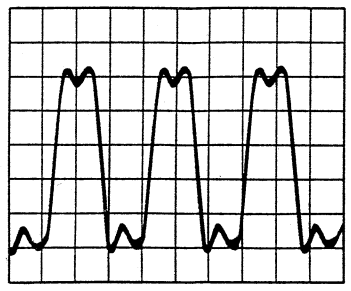

⑥ U14 Pin ㊽ (VD CLK) VOLT/DIV: TIME/DIV:

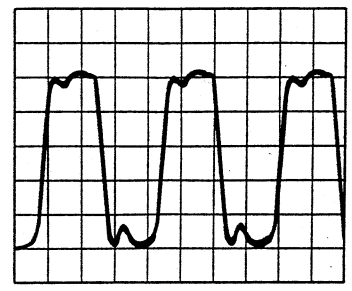

WIRING-5 (V4L: VCD)

F VCD C.B

FROM A MAIN VCD C.B CON102

Through-Hole Note

SIGNAL	VCC	+5V	A GND	D GND
○	▲	▲	●	●

⑥ (SC IN)
VOLT/DIV: 1.0V
TIME/DIV: 0.1µS

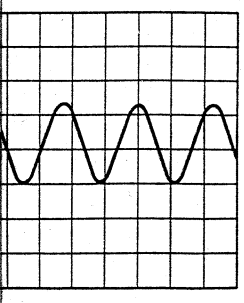

⑦

U14 Pin ⑬⑤ (CLK)
VOLT/DIV: 1V
TIME/DIV: 20nS

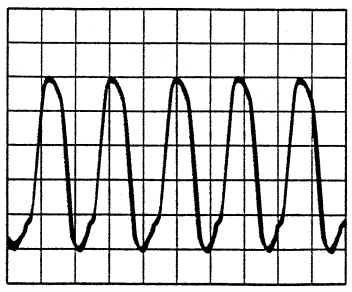

KARAOKE
VOLT/DIV: 200mV
TIME/DIV: 20µS

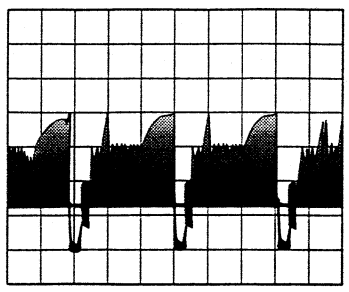

⑨

CN1 Pin ㉖ (L OUT)
CN1 Pin ㉘ (R OUT)
1kHz OUTPUT
VOLT/DIV: 1.0V
TIME/DIV: 0.2mS

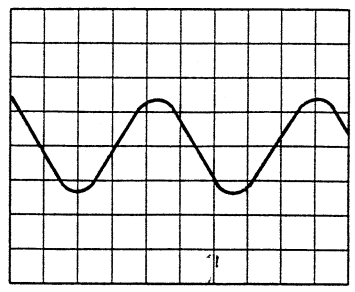

⑤ (VD CLK)
VOLT/DIV: 1V
TIME/DIV: 20nS

⑧

CN1 Pin ㉚ (CVBS R)
WHITE
VOLT/DIV: 200mV
TIME/DIV: 20µS

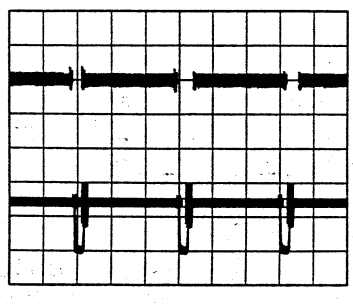

BLUE
VOLT/DIV: 100mV
TIME/DIV: 20µS

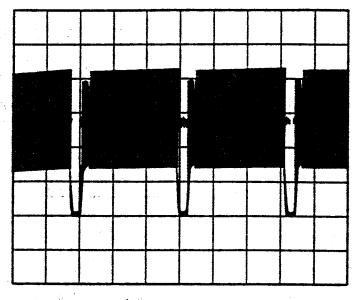

F VCD C.B

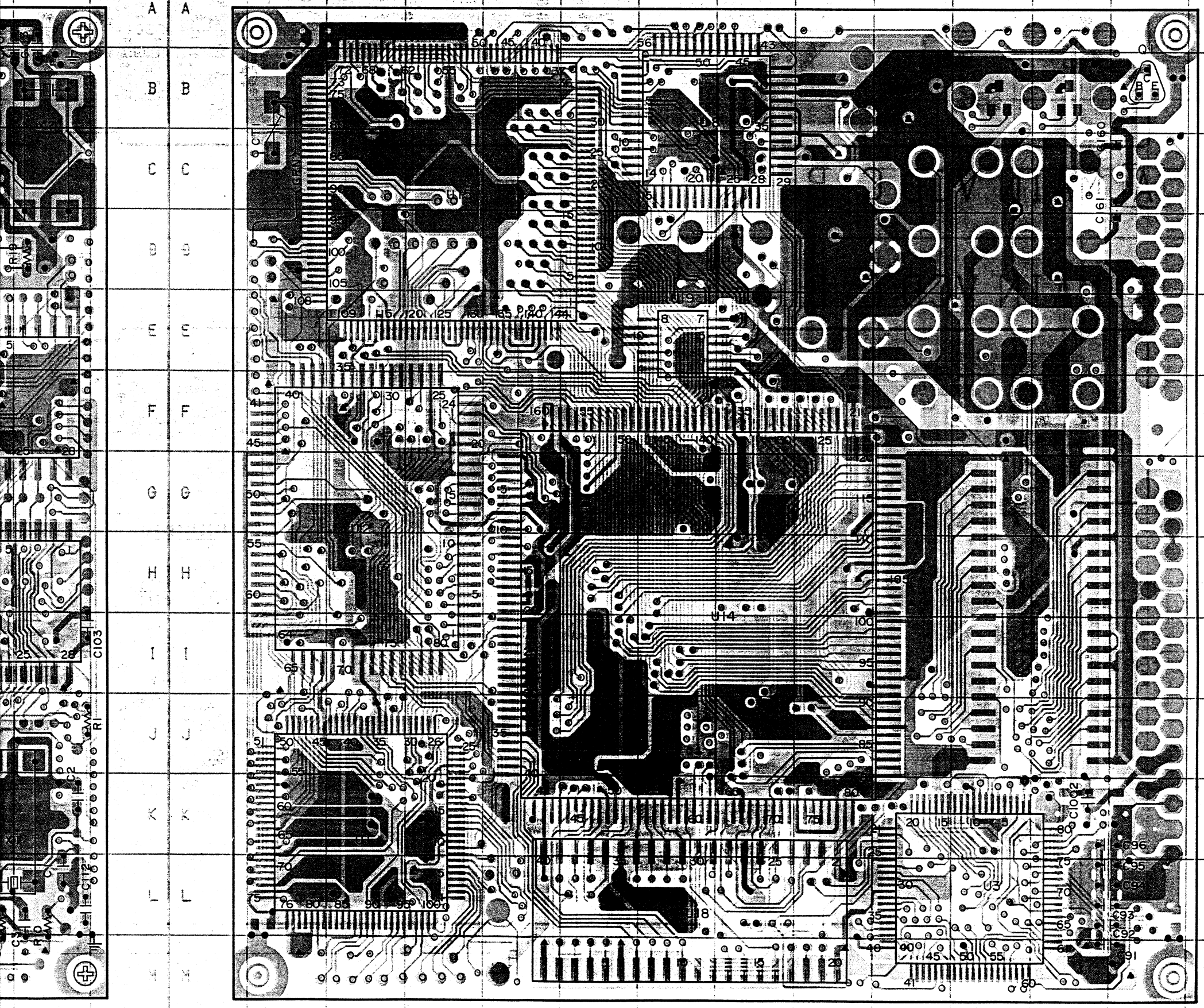

WIRING-6 (V5: MAIN VCD)

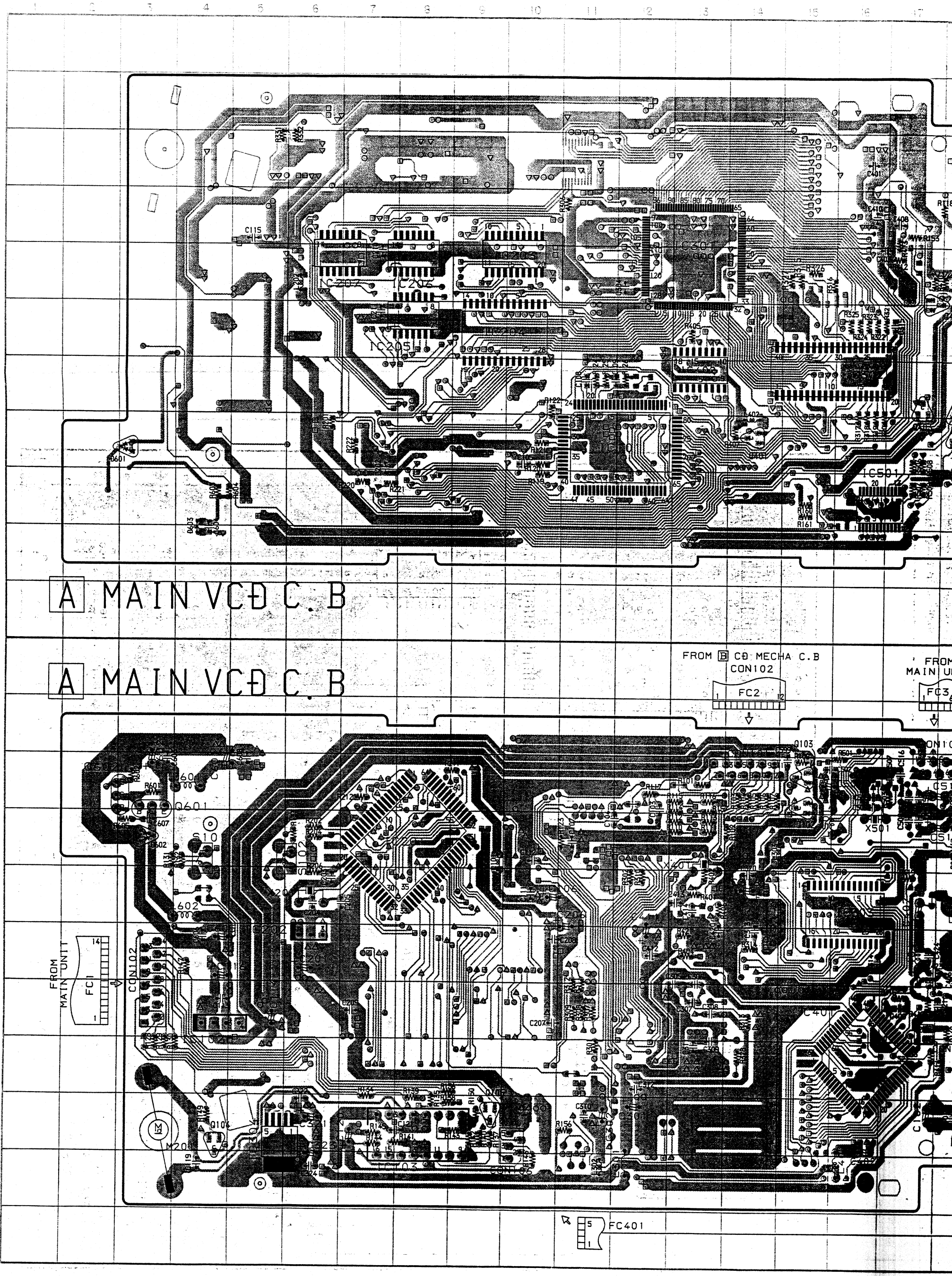

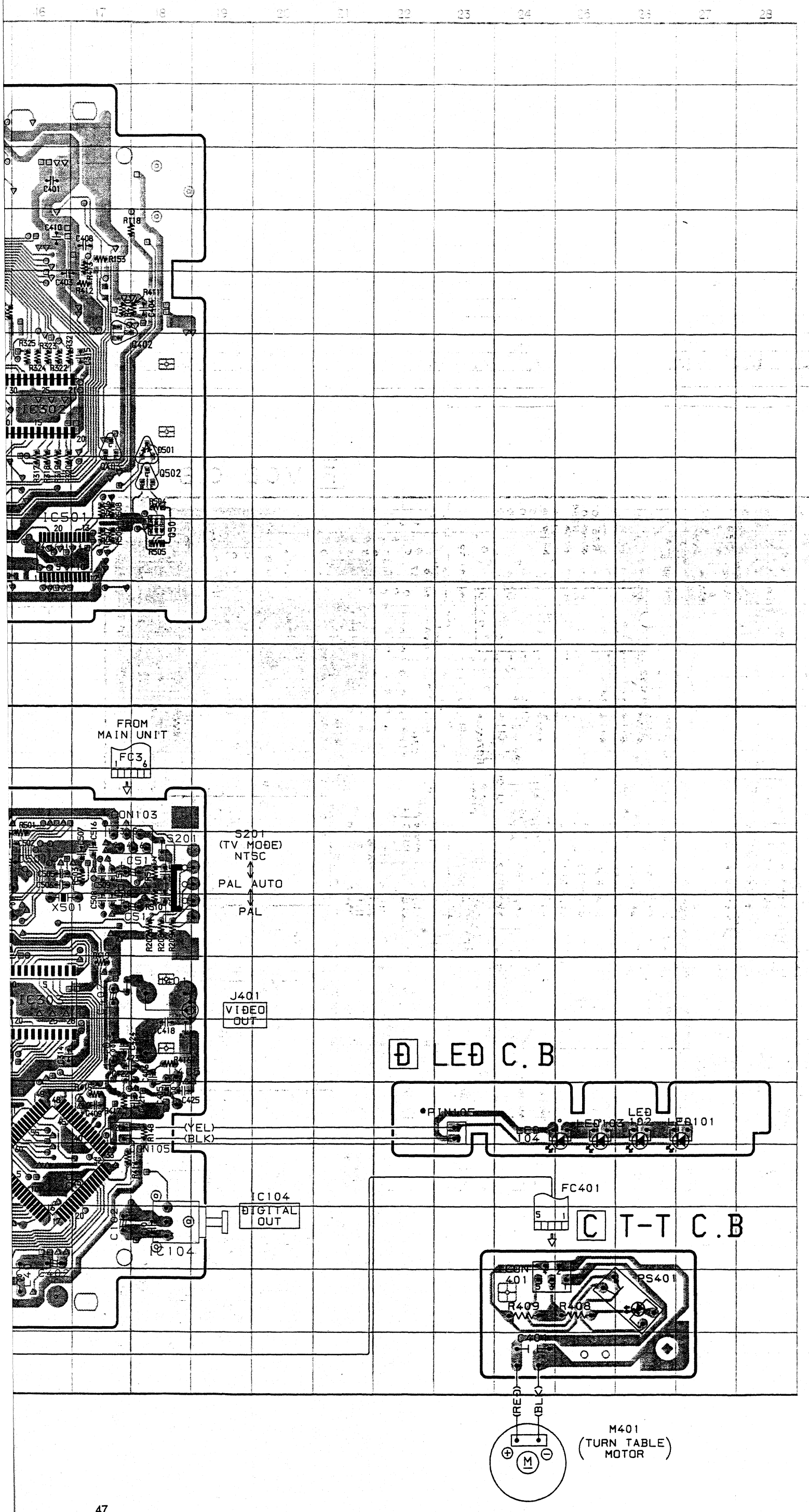
C401
C410
C408
R118
R153
C403
R412
R411
Q402
R325
R323
R321
R324
R322
IC501
Q501
Q502
R504
R505
Q503
FROM
MAIN UNIT
FC3
6
1
CON103
S201
C513
X501
C514
C507
C516
C502
C506
C508
C509
C510
C511
R310
C512
R207
R208
R209
S201
(TV MODE)
NTSC
PAL AUTO
PAL
J401
VIDEO
OUT
C418
C425
R48
(YEL)
(BLK)
CN105
IC104
DIGITAL
OUT
IC104
D LED C.B
PIN105
LED104
LED103
LED102
LED101
FC401
5
1
C T-T C.B
CON401
PS401
R409
R408
C401
(RED)
(BLK)
M401
(TURN TABLE
MOTOR)
M

SCHEMATIC DIAGRAM-9 (V5: MAIN VCD 1/2)

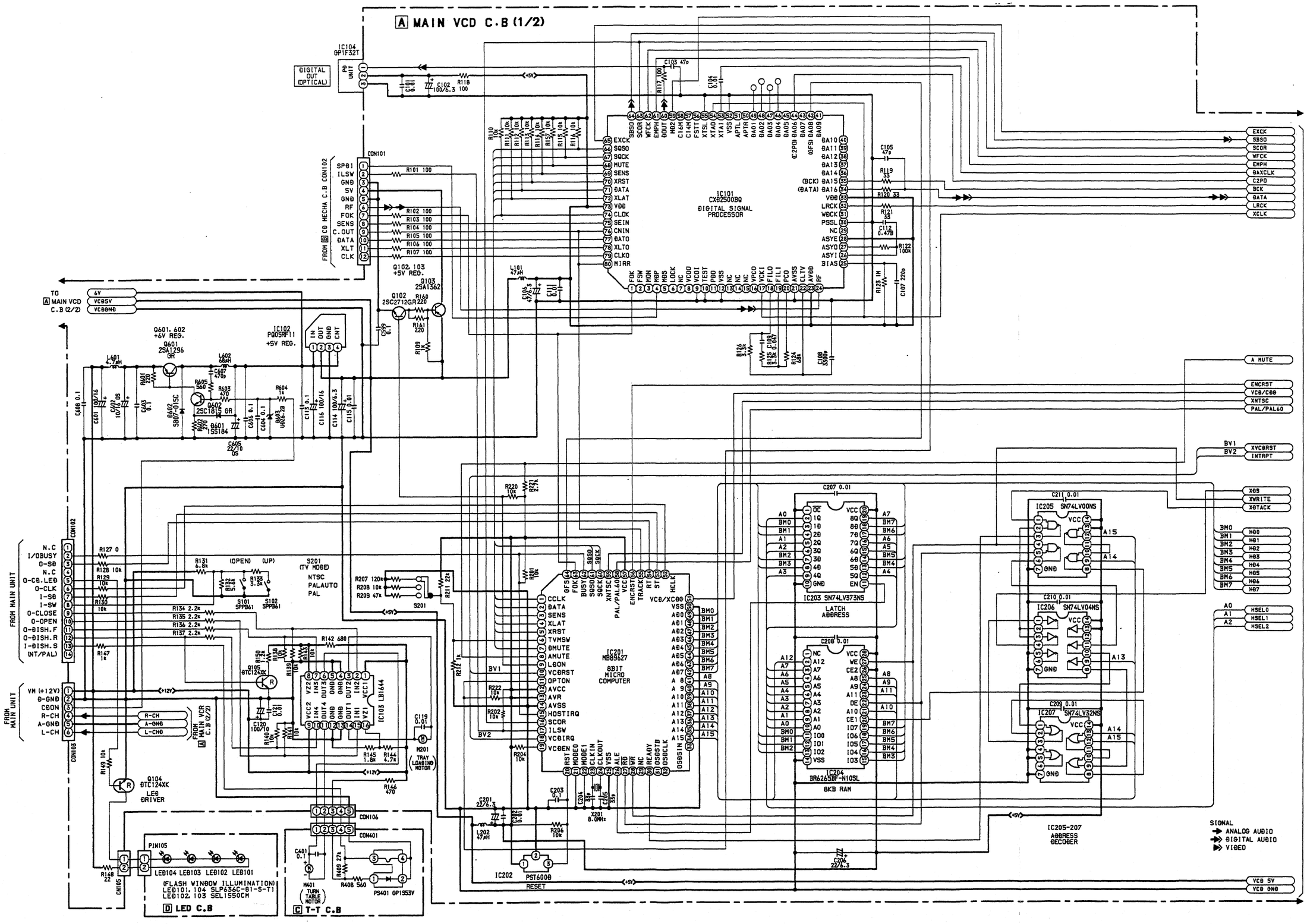

SCHEMATIC DIAGRAM-10 (V5: MAIN VCD 2/2)

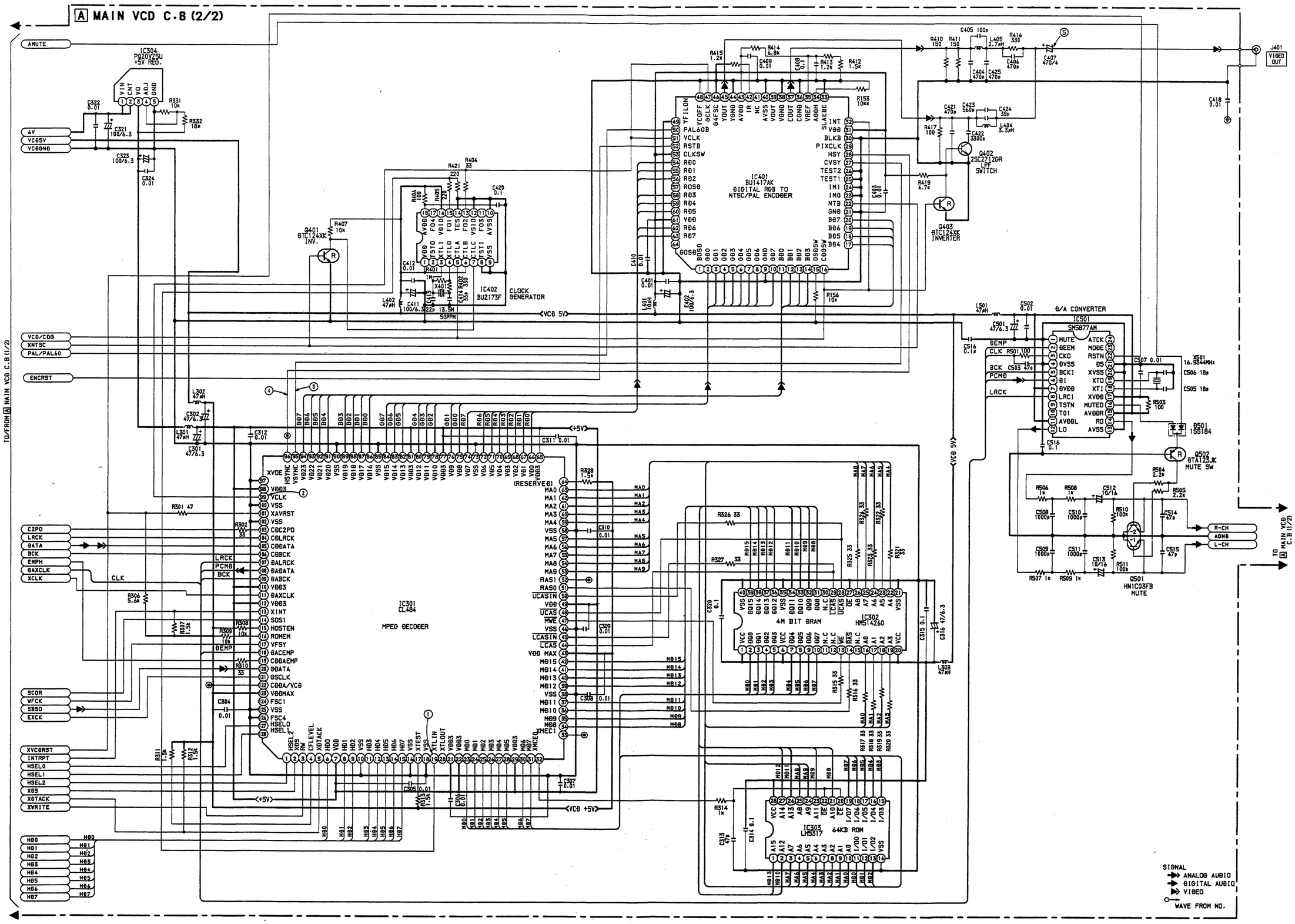

WAVE FORM

① IC301 Pin ⑲ (GCK) VOLT/DIV: 1V
40.5MHz TIME/DIV: 10nS
VCD PLAY
TV MODE: • NTSC
• PAL
• PAL AUTO

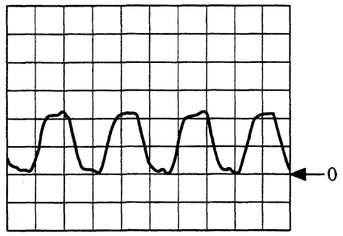

② IC301 Pin ㊾ (VCLK) VOLT/DIV: 1V
27MHz±1350Hz TIME/DIV: 10nS
VCD PLAY
TV MODE: • NTSC
• PAL
• PAL AUTO

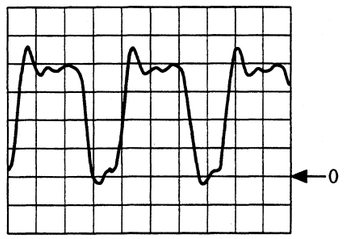

28.375MHz VOLT/DIV: 1V
CDG PLAY TIME/DIV: 10nS
TV MODE: • PAL
• PAL AUTO

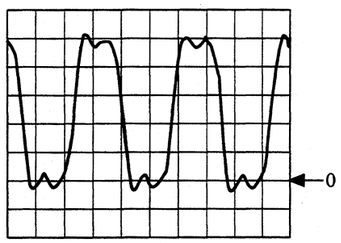

28.6363MHz VOLT/DIV: 1V
CDG PLAY TIME/DIV: 10nS
TV MODE: • NTSC

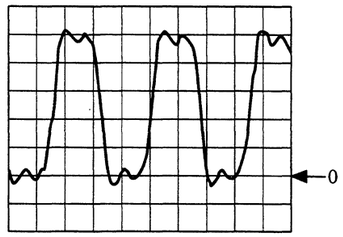

③ IC301 Pin ㊺ (V SYNC)
VCD, CDG PLAY
TV MODE: • NTSC
• PAL AUTO

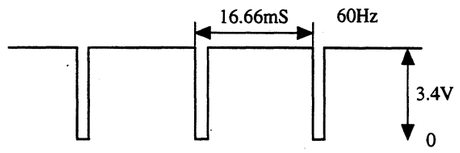

VCD, CDG PLAY
TV MODE: PAL

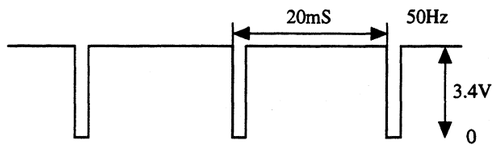

④ IC301 Pin ㊻ (H SYNC)
VCD, CDG PLAY
TV MODE: • NTSC
• PAL AUTO

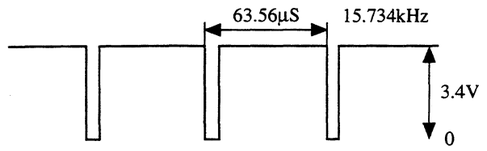

VCD, CDG PLAY
TV MODE: PAL

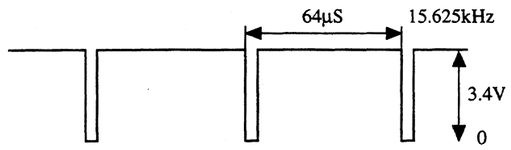

⑤ VIDEO OUT VOLT/DIV: 200mV
C407 ⊖ side TIME/DIV: 10µS
CDG PLAY: CD-T03 TRACK2
TV MODE:• NTSC

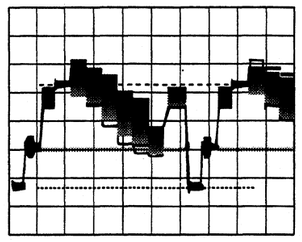

VCD PLAY: CD-T05 TRACK4 VOLT/DIV: 200mV
TV MODE:• NTSC TIME/DIV: 10µS

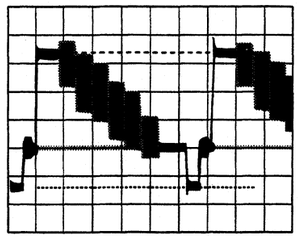

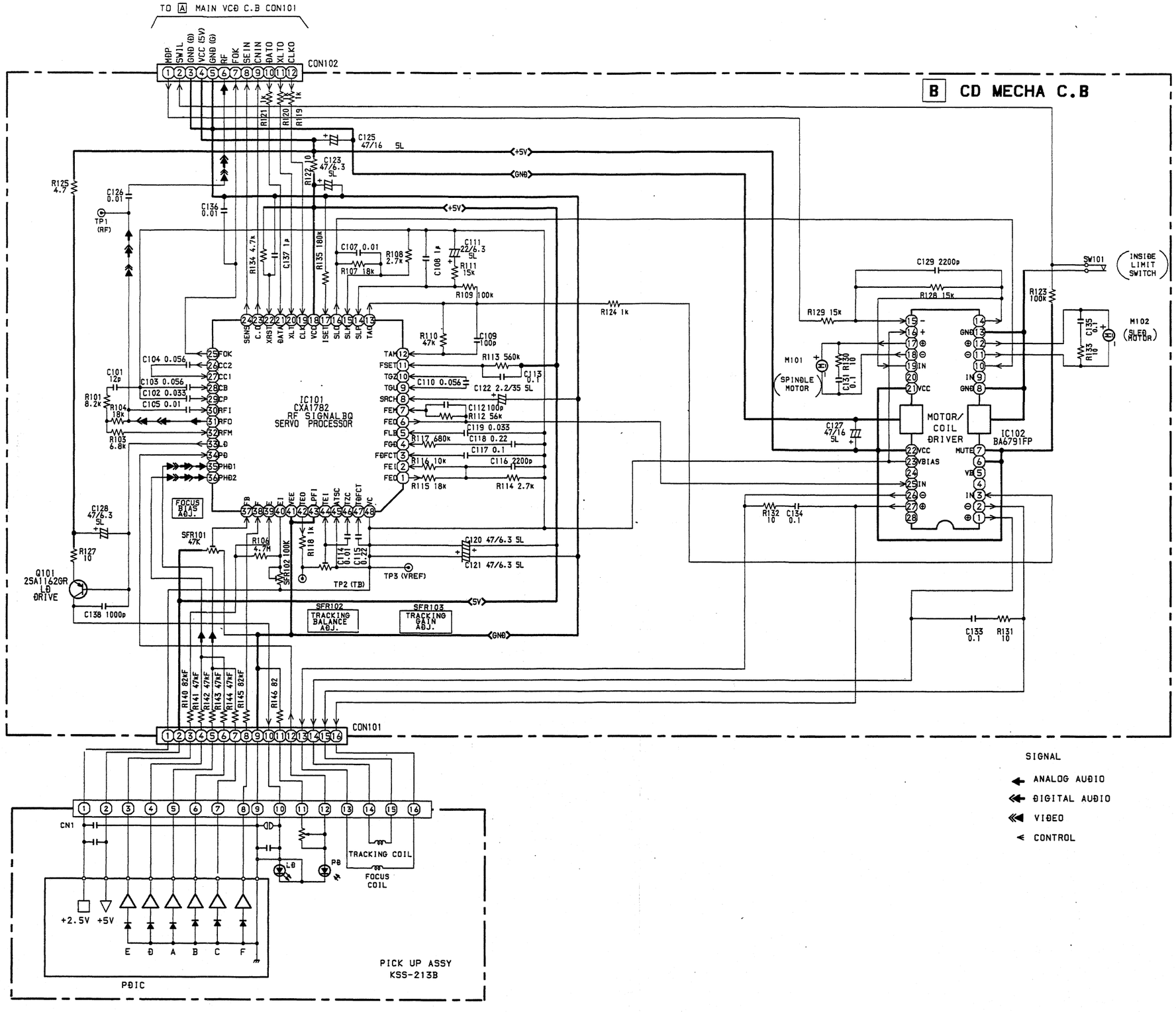
TO A MAIN VCD C.B CON101
CON102
MDP
SWIL
GND (D)
VCC (5V)
GND (G)
RF
FOK
SEIN
CNIN
DATO
XLTO
CLKO
B CD MECHA C.B
IC101
CXA1782
RF SIGNAL BQ
SERVO PROCESSOR
IC102
BA6791FP
MOTOR/
COIL
DRIVER
SPINDLE
MOTOR
M101
M102
SLED
MOTOR
SW101
INSIDE
LIMIT
SWITCH
FOCUS
BIAS
ADJ.
SFR101
SFR102
TRACKING
BALANCE
ADJ.
SFR103
TRACKING
GAIN
ADJ.
TP1
(RF)
TP2 (TB)
TP3 (VREF)
Q101
2SA1162GR
LD
DRIVE
+5V
GND
5V
CON101
CN1
TRACKING COIL
FOCUS
COIL
LD
PD
+2.5V
+5V
E
F
A
B
C
D
PICK UP ASSY
KSS-213B
PDIC
SIGNAL
ANALOG AUDIO
DIGITAL AUDIO
VIDEO
CONTROL

WIRING-7 (V5: CD MECHA)

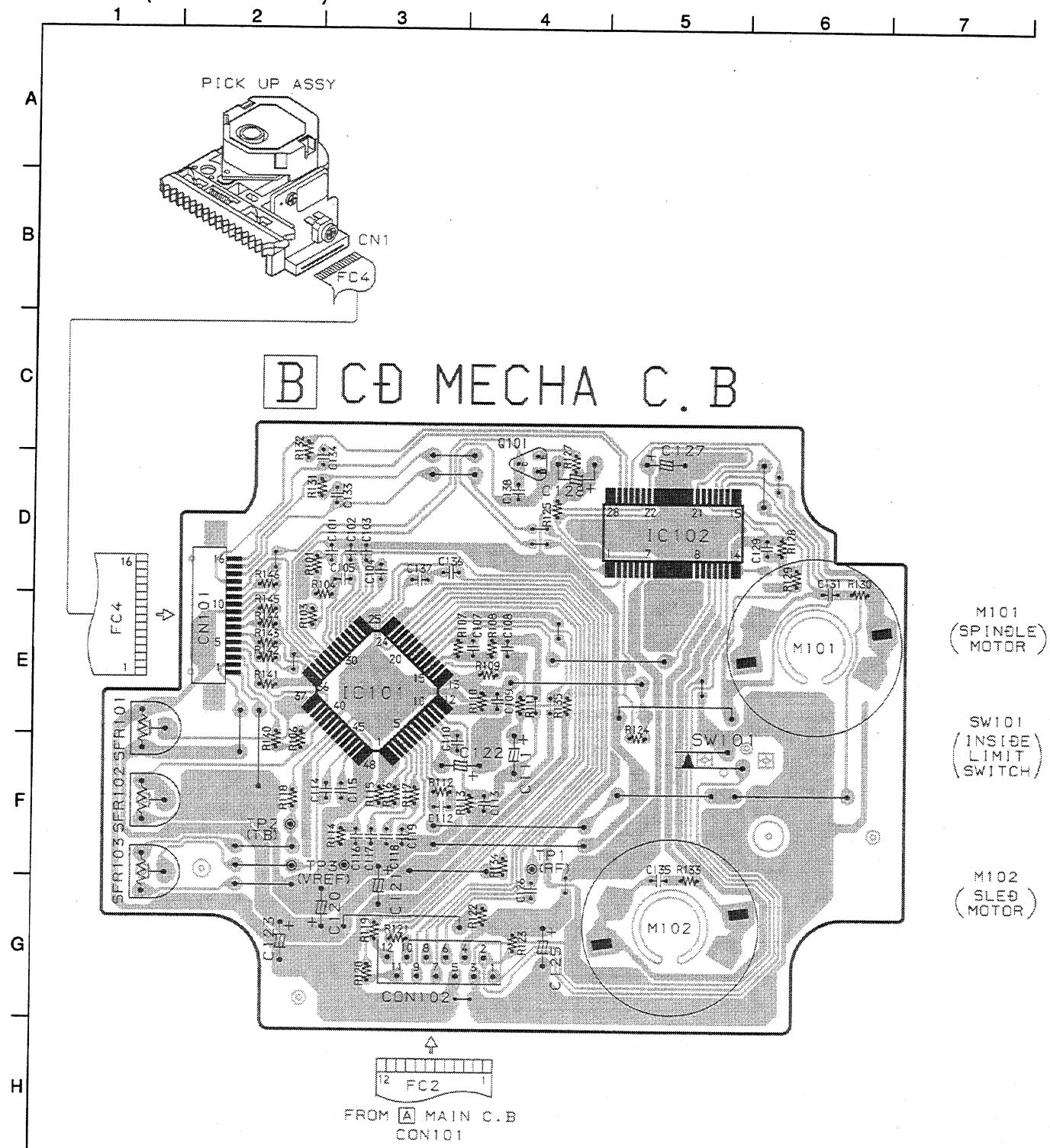

IC DESCRIPTION

IC, CXD2500BQ

Pin No.	Pin Name	I/O	Description
1	FOK	I	Focus OK input terminal. Used for SENS output and servo auto sequencer.
2	FSW	O	Spindle motor output filter selection output.
3	MON	O	Spindle motor ON-OFF control output.
4	MDP	O	Spindle motor servo control.
5	MDS	O	Spindle motor servo control.
6	LOCK	O	H output when GFS is sampled at 460 Hz and GFS is H. L output when L is continuously 8 times.
7	NC	—	Not used.
8	VCOO	O	Oscillator circuit output for analog EFM PLL.
9	VCOI	I	Oscillator circuit input for analog EFM PLL. fLOCK = 8.6436 MHz.
10	TEST	I	TEST terminal. Normally GND.
11	PDO	O	Charge pump output for analog EFM PLL.
12	VSS	—	GND.
13	NC	—	Not used.
14	NC	—	Not used.
15	NC	—	Not used.
16	VPCO	O	Charge pump output for vari-pitch PLL.
17	VCKI	I	Clock input from external VCO for vari-pitch. fc center = 16.9344 MHz.
18	FILO	O	Filter output for master PLL (slave = digital PLL).
19	FILI	I	Filter input for master PLL.
20	PCO	O	Charge pump output for
21	AVSS	—	Analog GND.
22	CLTV	I	VCO control voltage input for master.
23	AVDD	—	Analog power supply. (+3.5 V)
24	RF	I	EFM signal input.
25	BIAS	I	Asymmetry circuit constant current input.
26	ASYI	I	Asymmetry comparate voltage input.
27	ASYO	O	EFM full swing output (L = Vss, H = VDD.)
28	ASYE	I	L: asymmetry circuit OFF, H: asymmetry circuit ON.
29	NC	—	Not used.
30	PSSL	I	Audio data output mode selection input. Serial output at L, parallel output at H.
31	WDCK	O	D/A interface for 48-bit slot. Word clock f = 2 Fs.
32	LRCK	O	D/A interface for 48-bit slot. LR clock f = Fs.
33	VDD		Power supply. (+3.5 V)
34	S DATA	O	DA16 (MSB) output when PSSL = H. 48-bit slot serial data when PSSL = L. (2's COMP, MSB first).
35	BCLK	O	DA15 output when PSSL = H. 48-bit slot bit clock when PSSL = L.
36	NC	O	DA14 output when PSSL = H. 64-bit slot serial data when PSSL = L. (2's COMP, MSB first).
37	NC	O	DA13 output when PSSL = H. 64-bit slot bit clock when PSSL = L.
38	NC	O	DA12 output when PSSL = H. 64-bit slot LR clock when PSSL = L.

Pin No.	Pin Name	I/O	Description
39	GTOP	O	DA11 output when PSSL = H. GTOP output when PSSL = L.
40	XUGF	O	DA10 output when PSSL = H. XUGF output when PSSL = L.
41	XPLCK	O	DA09 output when PSSL = H. XPLCK output when PSSL = L.
42	GFS	O	DA08 output when PSSL = H. GFS output when PSSL = L.
43	RFCK	O	DA07 output when PSSL = H. RFCK output when PSSL = L.
44	C2PO	O	DA06 output when PSSL = H. C2P0 output when PSSL = L.
45	XRAOF	O	DA05 output when PSSL = H. XRAOFoutput when PSSL = L.
46	MNT3	O	DA04 output when PSSL = H. MNT3 output when PSSL = L.
47	MNT2	O	DA03 output when PSSL = H. MNT2 output when PSSL = L.
48	MNT1	O	DA02 output when PSSL = H. MNT1 output when PSSL = L.
49	MNT0	O	DA01 output when PSSL = H. MNT0 output when PSSL = L.
50	APTR	O	Aperture correction control output. H when R channel.
51	APTL	O	Aperture correction control output. H when L channel.
52	VSS	—	GND.
53	XTAI	I	Input to 16.9344 MHz X'tal oscillator circuit. or 33.8688 MHz input.
54	XTAO	O	16.9344 MHz X'tal oscillator output.
55	XTSL	I	X'tal selection input. L when X'tal is 16.9344 MHz. H when 33.8688 MHz.
56	FSTT	O	2/3 divider output of the pins 53 and 54. Does not change with vari-pitch.
57	C4M	O	4.2336 MHz output. When vari-pitch is performed, it changes too.
58	C16M	O	16.2336 MHz output. When vari-pitch is performed, it changes too.
59	MD2	I	Digital-out ON/OFF control. ON at H, OFF at L.
60	DOUT	O	Digital-out terminal.
61	EMPH	O	H output when the playback disc has emphasis. L output without emphasis.
62	WFCK	O	WFCK (Write Frame Clock) output.
63	SCOR	O	H output when S0 or S1 of the subcode sync is detected.
64	SBSO	O	Serial output of Sub P to W.
65	EXCK	I	Clock input for SBSO read out.
66	SQSO	O	SubQ 8-bit and PCM peak level data. 16-bit output.
67	SQCK	I	Clock input for SQSO readout.
68	MUTE	I	Mute at H. Release at L.
69	SENS	O	SENS output. Output to CPU.
70	XRST	I	System reset. Reset at L.
71	DATA	I	Serial data input from CPU.
72	XLAT	I	Latch input from CPU. Latches serial data at fall-down edge.
73	VDD	—	Power supply (+3.5 V).
74	CLOK	I	Serial data transfer clock input from CPU.
75	SEIN	I	Sensor input from SSP.
76	CNIN	I	Track jump number counted signal input.
77	DATO	O	Serial data output to SSP.
78	XLTO	O	Serial data latch output to SSP. Latches at fall-down edge.
79	CLKO	O	Serial data transfer clock output to SSP.
80	MIRR	I	Mirror signal input. Used for jump of 128 track or more at auto sequencer.

IC, μPD78044BGF

Pin No.	Pin Name	I/O	Description
1	DO ON	O	Digital output. ON/OFF output.
2~7	NC	—	Not used.
8	VDD	—	PWR. +5 V power supply.
9	CM CLK	I/O	Serial clock I/O.
10	C DATA	O	Serial data output.
11	M DATA	I	Serial data input.
12	O-CLK	O	DSP serial clock output.
13	O-XLT	O	DSP serial latch output.
14	O-SQCLK	O	DSP sub Q read-out clock output.
15	O-DATA	O	DSP serial data output.
16	I-SQDATA	I	DSP sub Q data input.
17	$\overline{\text{RESET}}$	I	System reset input.
18	I-SENS	I	DSP SENS input.
19	XRST	O	CD system reset output.
20	AVSS	—	PWR. GND potential of A/D converter input.
21	I-FOK	I	ASP FOK input.
22	I-GFS	I	DSP GFS input.
23	—	—	Connected GND.
24	I-ILSW	I	Pickup limit switch input.
25	I-OCSW	I	Tray OPEN/CLOSE switch input.
26~28	—	—	Connected GND.
29	AVDD	—	PWR. Analog power supply of A/D converter input.
30	AVREF	I	PWR. Reference voltage input of A/D converter input.
31	—	—	Connected GND.
32	NC	—	Open terminal.
33	VSS	—	PWR. GND potential.
34	X1	I	CLK. Terminal for 4.19 MHz clock oscillator.
35	X2	O	CLK. Terminal for 4.19 MHz clock oscillator.
36~38	NC	—	Not used.
39	$\overline{\text{C-BUSY}}$	O	MPEG status output.
40	MSTBY	I	Main microprocessor status input.
41	CLOCK	O	Main microprocessor serial clock output.
42	DATA	O	Main microprocessor serial data output.
43	D-REQ	O	Main microprocessor status output.
44	I-KEY	I	Main microprocessor serial data input.
45	SCOR	I	DSP SCOR input.
46	$\overline{\text{M-BUSY}}$	I	MPEG status signal input.
47	—	—	Connected GND.
48	IC	—	PWR. Connected to Vss.
49	MUTE L	O	L channel analog mute output.
50	MUTE R	O	R channel analog mute output.

Pin No.	Pin Name	I/O	Description
51	DSENS	I	Turntable sensor input.
52	VDD	—	PWR. +5 V power supply.
53~64	NC	—	Not used.
65	O-TOPN	O	Tray OPEN output.
66	O-CLS	O	Tray CLOSE output.
67	O-DFWD	O	Turntable forward rotation output.
68	O-DRVS	O	Turntable reverse rotation output.
69, 70	NC	—	Not used.
71	VLOAD	—	PWR. -27 V power supply for FL pull-down.
72~76	NC	—	Not used.
77	VCD	O	VIDEO CD selection output.
78	$\overline{\text{CD FUNC}}$	O	CD function selection output.
79	G-MUT	O	CDG mute output.
80	CD ON	O	FL. Digit output for FL display.

IC, LC7872E

Pin No.	Pin name	I/O	Description
1, 2	S1, S2	—	DSP select pin for CD. (Connected to VDD)
3	SBCK	O	Subcode read/write clock.
4	SFSY	I	Subcode frame sync signal.
5	PW	I	Subcode read/write data.
6	SBSY	I	Subcode block sync signal.
7	VDD1	—	Power supply for digital block. (Connected to +5V)
8	CE	I	Control pin when serial input or serial output. (Connected to GND)
9	DO	O	Serial data output. (Connected to GND)
10	DI	I	Serial data input. (Connected to GND)
11	CL	I	Clock when inputting/outputting serial data. (Connected to GND)
12	MUTE	I	Control signal disabling the subcode.
13	VSS1	—	GND for digital block.
14	$\overline{WE}$	O	DRAM control pin.
15	$\overline{RAS}$	O	DRAM control pin.
16~23	A0~A7	O	DRAM address pin.
24	DB0	I/O	DRAM data pin.
25	$\overline{CAS}$	O	DRAM control pin.
26	DB1	I/O	DRAM data pin.
27	$\overline{DE}$	O	DRAM control pin.
28	DB2	I/O	DRAM data pin.
29	DB3	I/O	DRAM data pin.
30	CE	I	"L": Normal mode "H": Color bar output (Not used)
31	CDGM	O	"H" output when CDG disk. (Not used)
32	TRANS0	O	Transparency digital output. (Not used)
33	TRANS1	O	Transparency digital output. (Not used)
34	TRANS2	O	Transparency digital output. (Not used)
35	TRANS3	O	Transparency digital output. (Not used)
36	TRANS4	O	Transparency digital output. (Not used)
37	TRANS5	O	Transparency digital output. (Not used)
38	VSS2	—	Composite video DAC GND pin.
39	VDD2	—	Composite video DAC power supply pin. (Connected to +5V)
40	BIAS	O	Capacitor connecting pin for eliminating ripple.
41	VIDEO	O	Composite video output pin (8-bit DAC output).
42	TEST	I	Test pin. Set to "L" normally. (Connected to GND)
43	LINE	I	When NP2 pin is "H": H: 263H L: 262H When NP2 pin is "L": H: 312H L: 314H (Not used)
44	FSCIN	I	Subcarrier clock input pin. (feedback resistor is built in) (Connected to GND)
45	VSYNC	O	Vertical sync signal output pin. (Not used)
46	TEST1	I	Test pin. Set to "L" normally. (Connected to GND)
47	YS	O	Superimpose control output. (Not used)
48	$\overline{CSTNC}$	O	Composite sync signal output. (Not used)

Pin No.	Pin name	I/O	Description
49	GND	—	GND.
50	EFLG	O	Error status monitor pin. (Not used)
51	FSX	O	For error status monitor trigger. (Not used)
52	DEN	I	Disk information display enable. H: BGC L: Enable (Connected to GND)
53	PALID	I	External control pin when superimposing with PAL (pull-up resistor is built in). (Not used)
54	VDD3	—	Digital power supply (+5V)
55	FSC	O	Subcarrier clock output. NTSC mode: 3.579545 MHz PAL mode: 4.433619 MHz (Not used)
56	VDD4	—	Digital power supply (+5V)
57	$\overline{\text{RESET}}$	I	Reset input pin.
58	N/$\overline{\text{P}}$1	I	NTSC/PAL selection pin. (RGB encoder) "H": NTSC "L": PAL
59	N/$\overline{\text{P}}$2	I	NTSC/PAL selection pin. (CD-G decoder) "H": NTSC "L": PAL
60	SON	I	Superimpose ON/OFF pin. (Connected to GND)
61	XIN2	I	Crystal oscillator 17.734476 MHz. (for PAL)
62	XOUT2	O	Crystal oscillator 17.734476 MHz. (for PAL)
63	XIN1	I	Crystal oscillator connection 14.31818 MHz. (for NTSC)
64	XOUT1	O	Crystal oscillator connection 14.31818 MHz. (for NTSC)

IC, CXA1782BQ

Pin No.	Pin name	I/O	Description
1	FEO	O	Focus error amplifier output pin. This pin is connected to the FZC comparator input internally.
2	FEI	I	Focus error input pin.
3	FDFCT	I	Capacitor connection pin for time constant used when there is defect.
4	FGD	I	This pin is connected to GND via capacitor when high frequency gain of the focus servo is attenuated.
5	FLB	I	This is a pin where the time constant is externally connected to raise the low frequency gain of the focus servo.
6	FEO	O	Focus drive output.
7	FEM	I	Focus amplifier inverted input pin.
8	SRCH	I	This is a pin where the time constant is externally connected to generate the focus search waveform.
9	TGU	I	This is a pin where the selection time constant is externally connected to set the tracking servo the high frequency gain.
10	TG2	I	This is a pin where the selection time constant is externally connected to set the tracking high frequency gain.
11	FSET	I	Pin for setting peak of the phase compensator of the focus tracking.
12	TAM	I	Tracking amplifier inverted input pin.
13	TAO	O	Tracking drive output.
14	SLP	I	Sled amplifier non-inverted input pin.
15	SLM	I	Sled amplifier inverted input pin.
16	SLO	O	Sled drive output.
17	ISET	I	The current which determines height of the focus search, track jump and sled kick is input.
18	VCC	—	+ 5 V power supply pin.
19	CLK	I	Serial data transfer clock input from CPU.
20	XLT	I	Latch input from CPU.
21	DATA	I	Serial data input from CPU .
22	XRST	I	Reset input pin. Reset at L.
23	COUT	O	Signal output to count the number of tracks.
24	SENS	O	FZC, DFCT, TZC, Gain or BAL is output depending on the command from CPU .
25	FOK	O	Output pin of the focus OK comparator.
26	CC2	O	Input pin where the DEFECT bottom hold output is capacitance coupled.
27	CC1	I	DEFECT bottom hold output pin.
28	CB	I	This is a pin where the DEFECT bottom hold capacitor is connected.
29	CP	I	This is a pin where the MIRR hold capacitor is connected and MIRR comparator non-inverted signal is input.
30	RFI	I	Input pin where the RF summing amplifier output is capacitance coupled.
31	RFO	O	RF summing amplifier output pin. (Eye pattern check point)
32	RFM	I	RF summing amplifier inverted input pin. Gain of RF amplifier is determined by the resistor connected between RFO and this pin.

Pin No.	Pin name	I/O	Description
33	LD	O	APC amplifier output pin.
34	PHD	I	APC amplifier input pin.
35~36	PHD1~2	I	RF I-V amplifier inverted input pin. These pins are connected to the A+C and B+D pins of the optical pickup.
37	FE BIAS	I	Bias adjustment pin of the focus error amplifier.
38~39	F~E	I	F and E IV amplifier non-inverted input pins. These pins are connected to the F and E of the optical pickup.
40	EI	—	Gain adjustment pin of the I-V amplifier E.
41	VEE	—	GND connection pin
42	TEO	O	Tracking error amplifier output pin. E-F signal is output.
43	LPFI	I	BAL adjustment comparator input pin.
44	TEI	I	Tracking error input pin.
45	ATSC	I	Window comparator input pin for detecting ATSC.
46	TZC	I	Tracking zero-cross comparator input pin.
47	TDFCT	I	Capacitor connection pin for the time constant used when there is defect.
48	VC	O	DC voltage output pin of VREF. (VDD/2)

IC, CL480

Pin No.	Pin Name	I/O	Description
1	HSEL2	I	Host address bus.
2	-DS	I	Data strobe.
3	R/-W	I	Read/write.
4	CFLEVEL	O	Coded data FIFO level status. Open drain.
5	-DACK	O	Host data acknowledge. Open drain.
6	HD0	I/O	Host data bus.
7	VDD3	—	Power supply pin. Used in 3.3 V.
8, 9	HD1, HD2	I/O	Host data bus.
10	VSS	—	GND.
11~15	HD3~HD7	I/O	Host data bus.
16	VSS	—	GND.
17	-TEST	I	Test terminal. Normally fixed to High.
18	VSS	—	GND.
19	XTL IN	I	Global clock. 40.5 MHz.
20	XTL OUT	O	Global clock. 40.5 MHz.
21, 22	VDD3	—	Power supply pin. Used in 3.3 V.
23~28	MD0~MD5	I/O	Memory data bus.
29	VDD3	—	Power supply pin. Used in 3.3 V.
30, 31	MD6, MD7	I/O	Memory data bus.
32, 33	-MCE0, -MCE1	O	Chip enable.
34~37	MD8~MD11	I/O	Memory data bus.
38	VSS	—	GND.
39~42	MD12~MD15	I/O	Memory data bus.
43	VDDMAX	—	Power supply pin. Used in 5.0 V.
44	-LCAS	O	Lower digit, column address strobe.
45	-LCASIN	I	Lower digit, data latch enable.
46	VSS	—	GND.
47	-MWE	O	Write enable.
48	-UCAS	O	Higher digit, column address strobe.
49	VDD3	—	Power supply pin. Used in 3.3 V.
50	-UCASIN	I	Higher digit, data latch enable.
51, 52	RAS0, RAS1	O	Lower address strobe.
53~57	MA9~MA5	O	Memory address bus.
58	VSS	—	GND.
59~63	MA4~MA0	O	Memory address bus.
64	RESERVED	—	Reserved.
65	VDD3	—	Power supply pin. Used in 3.3 V.
66~72	VD0~VD6	O	Pixel data bus. RGB or YCbCr format.
73	VSS		GND.
74~76	VD7~VD9	O	Pixel data bus. RGB or YCbCr format.
77	VDD3	—	Power supply pin. Used in 3.3 V.

Pin No.	Pin Name	I/O	Description
78~80	VD10~VD12	O	Pixel data bus. RGB or YCbCr format.
81	VDD3		Power supply pin. Used in 3.3 V.
82~84	VD13~VD15	O	Pixel data bus. RGB or YCbCr format.
85	VSS	—	GND.
86~89	VD16~VD19	O	Pixel data bus. RGB or YCbCr format.
90	VSS	—	GND.
91~94	VD20~VD23	O	Pixel data bus. RGB or YCbCr format.
95	-VSYNC or CSY	I/O	Vertical sync signal.
96	-HSYNC	I/O	Horizontal sync signal.
97	-VOE	I	Video output enable.
98	VDD3	—	Power supply pin. Used in 3.3 V.
99	VCLK	I/O	Video clock.
100	VSS	—	GND.
101	-RESET	I	Hardware reset.
102	VSS	—	GND.
103	CD-C2PO	I	Data error. Used during CD-ROM data input.
104	CD-LRCK	I	LR clock.
105	CD-DATA	I	Serial data input from CD-DSP.
106	CD-BCK	I	Bit clock from CD decoder.
107	DA-LRCK	O	LR clock.
108	DA-DATA	O	Bit serial audio sample signal.
109	DA-BCK	O	Audio bit clock.
110	VDD3	—	Power supply pin. Used in 3.3 V.
111	DA-XCLK	I	External audio frequency clock.
112	VDD3	—	Power supply pin. Used in 3.3 V.
113	-INT	O	Interrupt request.
114	RESERVED	—	Reserved.
115	HOST_ENA	I	Host enable.
116	RAM_ENA	I	Boot ROM enable.
117	RESERVED	—	Reserved.
118	DAC_EMP	O	Output emphasis flag.
119	CDDA_EMP	I	Input emphasis flag.
120	RESERVED	—	Reserved.
121	-FMV_DET	O	FMV detection. L: FMV detected.
122	CDDA/VCD	O	Input data identification. H: CDDA. L: video CD.
123	VDDMAX	I	Power supply pin. Used in 5.0 V.
124	RESERVED	—	Reserved.
125	VSS	—	GND.
126	RESERVED	—	Reserved.
127, 128	HSEL0, HSEL1	I	Host address bus.

IC, CXD1178Q

Pin No.	Pin Name	I/O	Description
1~8	R0~R7	I	Digital input.
9~16	G0~G7		
17~24	B0~B7		
25	BLK	I	Blanking pin. No signal at "H" (Output 0V). Output condition at "L".
26	$\overline{CE}$	I	Chip enable pin. No signal (Output 0V) at "H" and minimizes power consumption.
27	RCK	I	Clock pin. Moreover all input pins are TTL-CMOS compatible.
28	GCK		
29	BCK		
30, 31	DVSS	—	Digital GND.
32	VB	O	Connect a capacitor of about 0.1μF.
33	AVSS	—	Analog GND.
34	VREF	I	Set full scale output value.
35	IREF	I	Connect a resistance 16 times "16R" that of output resistance value "R".
36	$\overline{RO}$	O	Inverted current output pin. Normally dropped to analog GND.
37	RO	O	Current output pin. Voltage output can be obtained by connecting a resistance.
38	$\overline{GO}$	O	Inverted current output pin. Normally dropped to analog GND.
39	GO	O	Current output pin. Voltage output can be obtained by connecting a resistance.
40	$\overline{BO}$	O	Inverted current output pin. Normally dropped to analog GND.
41	BO	O	Current output pin. Voltage output can be obtained by connecting a resistance.
42	VG	I	Connect a capacitor of about 0.1μF.
43~46	AVDD	—	Analog VDD.
47, 48	DVDD	—	Digital VDD.

IC, MC68HC705

Pin No.	Pin Name	I/O	Description
1	RST	I	Reset.
2	IRQ	I	MPEG DECODER request signal.
3	VPP	—	ROM write power.
4~11	PA7~PA0	I/O	MPEG DECODER data bus 7~0.
12~14	PB0~PB2	O	MPEG DECODER register select 0~2.
15	PB3	O	MPEG DECODER data R/W select.
16	PB4	O	MPEG DECODER data strobe.
17	PB5	I	MPEG DECODER data acknowledge.
18	PB6	I	CD-I bit stream detect.
19	PB7	I	CD DA/VCO select.
20	VSS	—	Power ground.
21	PC7	I	MPEG DECODER FIFO status.
22, 23	PC6, PC5	—	Not used.
24	PC4	O	MPEG DECODER reset signal.
25, 26	PC3, PC2	—	Not used.
27, 28	PC1, PC0	O	Key scan out 1, 0.
29	RDI	—	Not used.
30	$\overline{TDO}$		
31~34	PD2~PD5	I	Key scan input 0~3.
35	TCMP	O	Remote data out.
36	PD7	—	Not used.
37	CAP	I	Remote data in.
38, 39	OSC2, OSC1	I	X_tal in.
40	VDD	—	Power 5V.

IC, μPD6376

Pin No.	Pin Name	I/O	Description
1	FS-SEL	I	As this terminal is "Low" or open, L-ch data and R-ch data are inputted for serial data by the pin 15. As this terminal is "High", L-ch data is inputted by the pin 15, R-ch data is inputted by the pin 14. (Pull-downed by the 100 kΩ resistance in IC.)
2	D. GND	—	Ground terminal for the logic circuit.
3	NC	—	—
4	D. VDD	—	Power supply terminal for the logic circuit .
5	A. GND	—	Ground terminal for the analog circuit.
6	R. OUT	O	Output terminal for the right analog signal.
7, 8	A. VDD	—	Power supply terminal for the analog circuit.
9, 10	R. REF, L. REF	—	Operational Amplifier reference bias terminal. Normally connected to A.GND via a capacitor.
11	L. OUT	O	Output terminal for the left analog signal.
12	A. GND	—	Ground terminal for the analog circuit.
13	LRCK	I	As the pin 1 is "Low" or open, this is input terminal for left/right identification signal. As the pin 1 is "High", this is input terminal for word identification signal of input data.
14	LRSEL	I	As the pin 1 is "Low" or open, this is left/right selection terminal for LRCK signal. At "High" of LRCK signal, set LRSEL pin at "Low" for L-ch DATA input. At "Low" of LRCK signal, set LRSEL pin at "High" for L-ch DATA input. As the pin 1 is "High", this is input terminal for R-ch serial data.
15	DATA	I	As the pin 1 is "Low" or open, this is input terminal for L-ch and R-ch serial data. As the pin 1 is "High", this is input terminal for L-ch serial data.
16	BCK	I	Input terminal for read clock of serial input data.

IC, CXA1645M

Pin No.	Pin Name	I/O	Description
1	GND	—	GND.
2	RIN	I	Analog RGB input terminals.
3	GIN		
4	BIN		
5	NC	—	N. C.
6	SCIN	I	Subcarrier input terminal.
7	NPIN	I	NTSC, PAL mode select terminal. NTSC: Vcc, PAL: GND.
8	BFOUT	O	Output terminal to monitor the BF pulse. Unable to drive 75 Ω load.
9	YCLPC	—	External time constant for Y signal clamp is connected to this terminal.
10	SYNCIN	I	Composite sync signal input terminal. Input at TTL level. SYNC period at L (≦ 0.8 V). H (≧ 2.0 V).
11	NC	—	N. C.
12	VCC	—	Power supply terminal.
13	IREF		Terminal which determines internal reference current.
14	VREF	—	Internal reference voltage terminal.
15	COUT	O	Chroma signal output terminal.
16	YOUT	O	Y signal output terminal.
17	YTRAP	I	Terminal to reduce cross-color due to subcarrier frequency component included in the Y signal.
18	FO	I	fo adjustment terminal of internal filter. The following resistor is connected between GND depending upon NTSC or PAL mode. NTSC: 20 kΩ (±1%) PAL: 16 kΩ (±1%).
19	VCC	—	Power supply terminal.
20	CVOUT	O	Composite video signal output terminal.
21	BOUT	O	Analog RGB signal output terminal
22	GOUT		
23	ROUT		
24	GND	—	GND.

IC, HD6433042F06F

Pin No.	Pin Name	I/O	Description
1	VCC	I	Power supply.
2	CDG DIN	O	CD-G decoder serial data signal.
3	CDG XLT	O	CD-G decoder latch signal.
4	CDG CLK	O	CD-G decoder clock signal.
5~7	GADSP0~2	O	Gate array DSP format 0~2.
8	$\overline{\text{DRQ CDDEC}}$	I	CD-ROM decoder data request signal.
9	$\overline{\text{DRQ MPEG}}$	I	MPEG decoder data request signal.
10	$\overline{\text{RESO}}$	O	External reset output.
11	GND	I	GND.
12	TXD0	O	Serial interface (RXD).
13	TXD1	O	CXD for test.
14	RXD0	I	Serial interface (RXD).
15	RXD1	I	RXD for test.
16	SCK0	I/O	Serial interface (SCK).
17	$\overline{\text{MPRST}}$	O	Peripheral reset. L: RESET ON.
18~21	D0~D3	I/O	Data bus 0~3.
22	GND	I	GND.
23~34	D4~D15	I/O	Data bus 4~15.
35	VCC	I	Power supply.
36~43	A0~A7	O	Address bus 0~7.
44	GND	I	GND.
45~56	A8~A19	O	Address bus 8~19.
57	GND	I	GND.
58	$\overline{\text{WAIT}}$	I	External wait signal.
59	GLUE ON	O	DMA glue circuit enable 0: OFF. 1: ON.
60	M EMPH	O	MPEG AUDIO emphasis 0: OFF. 1: ON.
61	FAI	O	System clock output.
62	$\overline{\text{STBY}}$	I	Standby. (Hardware standby mode at low level).
63	$\overline{\text{RES}}$	I	Reset input. (Reset at low).
64	NMI	I	Non-maskable interrupt. (Non-maskable interrupt is requested).
65	GND	I	GND.
66	EXTAL	I	External crystal is connected to this pin.
67	XTAL	I	External crystal is connected to this pin.
68	VCC	I	Power supply.
69	$\overline{\text{AS}}$	O	Address strobe signal.
70	$\overline{\text{RD}}$	O	External address read enable signal.
71	$\overline{\text{HWR}}$	O	External address high write enable signal.
72	$\overline{\text{LWR}}$	O	External address low write enable signal.
73~75	MOD0~MOD2	I	Mode terminal. Operating mode is set using this terminal.
76	AVCC	I	Power supply terminal of A/D converter and D/A converter.
77	VREF	I	Reference voltage input to A/D converter and D/A converter.

Pin No.	Pin Name	I/O	Description
78, 79	P70, P71	I	IN port 0, 1 for test.
80	PAL/NTSC	I	PAL/NTSC status 0: NTSC. 1: PAL.
81	REQ CD	I	Serial interface (REQ_CD).
82~85	P74~P77	I	Reserve.
86	AGND	I	GND terminal of A/D converter and D/A converter.
87	INT CDDRV	I	Serial interface interrupt.
88	INT CDDEC	I	CD-ROM decoder interrupt.
89	INT MPEG	I	MPEG decoder interrupt.
90	IRQ3	I	Reserve.
91	P84	I	Reserve.
92	GND	I	GND.
93	DONE CDDEC	O	CD-ROM decoder DONE signal.
94	DONE MPEG	O	MPEG decoder DONE signal.
95	CDG VOFF	O	CD-G decoder video OFF signal. 1: VOFF.
96	SYS MUTE1	O	Audio mute 1 signal. 1: mute ON.
97	INTFLDO	I	EVEN/OFF input signal. 0: EVEN. 1: 0DD.
98	SW AUDIO	O	Audio select signal. 0: CD-G/DA. 1: MPEG.
99	SYS MUTE0	O	Audio mute 0 signal. 0: mute on.
100	REQ MPEG	O	Serial interface (REQ MPEG)

IC, µPD65622GF-239-3B9

Pin No.	Pin Name	I/O	Description
1	LRCKCD	O	Main data signal to CXD1186.
2	SDATACD	O	
3	BCKCD	O	
4	C2POCD	O	
5	$\overline{\text{CSROMH}}$	O	Chip select signal to CXD1186 (host side).
6	$\overline{\text{CSROMC}}$	O	Chip select signal to CXD1186 (CPU side).
7	$\overline{\text{DACKROM}}$	O	DMA acknowledge signal to CXD1186.
8	HDRQ	I	Data transfer request signal from CXD1186. This signal is active high.
9	$\overline{\text{ROMRD}}$	O	Read/write signal to CXD1186.
10	$\overline{\text{ROMWR}}$	O	Read/write signal to CXD1186.
11	EMPHI	I	This signal allows inputting the main data from the CD drive.
12	GND	—	GND.
13	SDATAI	I	This signal allows inputting the main data from the CD drive.
14	BCKI	I	
15	LRCKI	I	
16	C2POI	I	
17	GND	—	GND.
18	16.9M	I	16.9344 MHz oscillator circuit input signal.
19	16.9F	O	16.9344 MHz oscillator circuit output signal.
20	GND	—	GND.
21	GSFSY	I	Write frame clock signal used to input the sub data from CD drive.
22	EMPO	O	Main data signal to CXD1186.
23	LRCKO	O	Audio data signal to audio DAC.
24	SDATAO	O	Audio data signal to audio DAC.
25	RESET	O	Active high reset signal.
26	GND	—	GND.
27	BCKCO	O	Audio data signal to audio DAC.
28	$\overline{\text{GGLUE}}$	I	The input signal which makes the glue circuit valid from GSFSY input.
29	$\overline{\text{GGSFSY}}$	O	Not used.
30	SDATAMA	I	Audio data signal from µPD61010.
31	BCKMA	I	
32	LRCKMA	I	
33	GND	—	GND.
34	VCC	—	Vcc.
35	$\overline{\text{16.9M}}$	O	16.9344 MHz output signal.
36	GND	—	GND.
37	$\overline{\text{DS}}$	O	Control signal to µPD61010.
38	$\overline{\text{CSMPEG}}$	O	Chip select signal to CXD1186.
39	$\overline{\text{R/W}}$	O	Control signal to µPD61010.
40	INT	I	Interrupt request signal from µPD61010. This signal is active high.
41	$\overline{\text{HDAK}}$	I	Data acknowledge signal from µPD61010.

Pin No.	Pin Name	I/O	Description
42	$\overline{\text{DREQ}}$	I	DRAM data transfer request signal from µPD61010.
43	$\overline{\text{DACKMP}}$	O	DMA acknowledge signal to µPD61010.
44	$\overline{\text{DAK}}$	I	Bit stream data transfer request signal from µPD61010.
45	$\overline{\text{CSCELL}}$	O	Chip select signal to standard cell.
46	GND	—	GND.
47	$\overline{\text{RESET}}$	I	System reset signal.
48	GND	—	GND.
49	$\overline{\text{CSRAM}}$	O	Chip select signal to the system RAM.
50	$\overline{\text{LWR}}$	I	Lower data write signal from CPU.
51	$\overline{\text{HWR}}$	I	Upper data write signal from CPU.
52	$\overline{\text{RD}}$	I	Data read signal from CPU.
53	GND	—	GND.
54	$\overline{\text{AS}}$	I	Address strobe signal from CPU.
55	$\overline{\text{CSIO}}$	O	Optional chip select signal.
56~63	A19~A12	I	Address signal from CPU.
64	GND	—	GND.
65	$\overline{\text{WAIT}}$	O	Wait signal to CPU.
66	GLUEON	I	This signal makes the glue logic valid in order to prevent CPU DMAC from trouble. This circuit is made valid at high.
67	$\overline{\text{SEL12}}$	I	Input signal to select 12 MHz or 16 MHz CPU clock.
68	EMPMA	I	Audio data signal from µPD61010.
69	GND	—	GND.
70	FAI	I	Basic clock signal (12 MHz) from CPU.
71	GND	—	GND.
72	VCC	—	Vcc.
73	GND	—	GND.
74	$\overline{\text{INTMPEG}}$	O	Interrupt request signal to CXD1186.
75	SWAUDIO	I	Selection signal between MPEG audio and CD-DA audio signals.
76	$\overline{\text{DRQ1}}$	O	DMA transfer request signal to µPD61010.
77	$\overline{\text{DRQ0}}$	O	DMA transfer request signal to CXD1186.
78~80	GADSP2~0	I	Format select signal to convert format of the main data from CD drive.

IC, CXD1186CR

Pin No.	Pin Name	I/O	Description
1~4	A0~A3	I	CPU address signal.
5	HMDS	I	Host mode select signal.
6, 7	HA0, HA1	I	Host address signal.
8	XHCS	I	Chip select negative logic signal from the host.
9	HINT	O	Interrupt request negative logic signal to the host.
10	GND	—	GND.
11	XHRD	I/O	Data read strobe signal from the host or to the SCSI control IC.
12	XHWR	I/O	Data write strobe signal from the host or to the SCSI control IC.
13~20	HDB0~HDB7	I/O	Host data bus.
21	GND	—	GND.
22	HDBP	I/O	Error flag. Host data bus.
23	XRST	I	Reset negative logic signal.
24	HDRQ	O	Data request positive logic signal to the host. Or DMA acknowledge negative logic signal to the SCSI control IC.
25	XHAC	I	DMA acknowledge negative logic signal from the host Or data request positive logic signal from the SCSI control.
26	XTC	I	Terminal count negative logic signal.
27	ADRQ	I	DMA request positive logic signal from ADP.
28	XAAC	O	DMA acknowledge negative logic signal to ADP.
29, 30	BA0, BA1	O	Buffer memory address.
31	VDD	—	Power supply (+5 V) terminal.
32~39	BA2~BA9	O	Buffer memory address.
40	GND	—	GND.
41~46	BA10~BA15	O	Buffer memory address.
47	XMOE	O	Buffer memory output enable negative logic signal.
48	XMWR	O	Buffer memory write negative logic signal.
49	BDB0	I/O	Buffer memory data bus.
50	GND	—	GND.
51~57	BDB1~BDB7	I/O	Buffer memory data bus.
58	BDBP	I/O	Buffer memory pointer data bus.
59	XTL2	O	X'TAL oscillator circuit output terminal.
60	XTL1	I	X'TAL oscillator input terminal.
61	GND	—	GND.
62	HCLK	O	X'TAL 1 divided-by-2 clock signal.
63	LRCK	I	LR clock from CD player.
64	DATA	I	Serial data from CD player.
65	BCLK	I	Bit clock from CD player.
66	C2P0	I	C2 pointer from CD player.
67~70	DB0~DB3	I/O	CPU data bus.
71	VDD	—	Power supply (+5 V) terminal.
72~75	DB4~DB7	I/O	CPU data bus.

Pin No.	Pin Name	I/O	Description
76	XCS	I	Chip select negative logic signal from CPU.
77	XRD	I	IC internal register read-out strobe negative logic signal from CPU.
78	XWR	I	IC internal register write strobe negative logic signal from CPU.
79	INT	O	Interrupt request signal to CPU.
80	GND	—	GND.

IC, TLC29321PW

Pin No.	Pin Name	I/O	Description
1	VDD	—	Power supply terminal to the internal logic circuit.
2	VCO LS	I	VCO output frequency divide-by-2 divider select terminal. The VCO output frequency can be divided by 2 and output as this terminal is controlled by external logic.
3	VCOO	O	VCO output terminal. Goes to low level during inhibit.
4, 5	FIN-A, FIN-B	I	2 input terminal for edge difference detection between the reference frequency (fREF-IN) and the frequency from external counter. The fREF-IN is input to the FIN-A terminal normally, and the divided or multiplied frequency from external counter is input to the FIN-B terminal.
6	PFDO	O	PFD output terminal.
7	GND	—	Internal logic circuit GND terminal.
8	NC	—	N.C.
9	PFDIH	I	PFD inhibit function control terminal.
10	VCOIH	I	VCO inhibit function control terminal.
11	A GND	—	VCO GND.
12	VCOI	I	VCO control voltage input. The VCO oscillator control voltage is input from an external low-pass filter to form PLL.
13	RBIAS	I	External resistor is connected to this terminal for setting the VCO oscillation frequency. A bias resistor is connected between this terminal and power supply line to supply bias for internal VCO oscillation and for setting and adjusting the oscillating frequency.
14	A VDD	—	VCO power supply voltage terminal.

IC, HD49307

Pin No.	Pin No.	I/O	Description
1~5	G4~G8	I	Digital input terminal.
6	B1	—	N. C.
7	NC	I	Digital input terminal.
8~12	B2~B6	I	Digital input terminal.
13~15	NC	—	N. C.
16, 17	B7, B8	I	Digital input terminal.
18	NC	—	N. C.
19	RCLK	I	R channel clock input.
20	GCLK	I	G channel clock input.
21	BCLK	I	B channel clock input.
22	DVSS	—	Digital GND.
23	DVDD	—	Digital power supply.
24	NC	—	N. C.
25	CBU	—	External phase compensation capacitance connection terminal.
26	CBL	—	Bypass capacitance connection terminal.
27~29	NC	—	N. C.
30	VRREF	I	Reference voltage input terminal.
31	AVSS	—	Analog GND.
32	AVDD	—	Analog power supply.
33	BOUT	O	B channel analog signal output terminal.
34	AVDD	—	Analog power supply.
35	NC	—	N. C.
36	GOUT	O	G channel analog signal output terminal.
37	AVDD	—	Analog power supply.
38	ROUT	O	R channel analog signal output terminal.
39	AVSS	—	Analog GND.
40	AVDD	—	Analog power supply.
41	DVDD	—	Digital power supply.
42	R1	I	Digital input terminal.
43~44	NC	—	N. C.
45~51	R2~R8	I	Digital input terminal.
52~54	G1~G3	I	Digital input terminal.
55, 56	NC	—	N. C.

IC, μPD61010

Pin No.	Pin Name	I/O	Description
1	VDD	—	+5 V power supply.
2~6	HD9~5	I/O	Host data bus.
7	VDD	—	+5 V power supply.
8	GND	—	GND.
9~13	HD4~0	I/O	Host data bus.
14	VDD	—	+5 V power supply.
15	GND	—	GND.
16	$\overline{\text{DREQ}}$	O	DMA request signal.
17	$\overline{\text{DACK}}$	I	DMA acknowledge signal.
18	HSEL	I	Signal to select the host CPU access method.
19	DRQ	I	Data input request for bit stream input from CD-ROM decoder.
20	VDD	—	+5 V power supply.
21	GND	—	GND.
22	$\overline{\text{DAK}}$	O	Data input response for bit stream input from CD-ROM decoder, or DMA input request for code input.
23	$\overline{\text{DRD}}$	O	Bit stream input approval signal.
24, 25	NC	—	N. C.
26~33	CD0~7	I	Data bus for bit stream input from CD-ROM decoder.
34	VDD	—	+5 V power supply.
35	GND	—	GND.
36~39	MD7~4	I/O	DRAM data bus.
40	VDD	—	+5 V power supply.
41, 42	GND	—	GND.
43~46	MD3~0	I/O	DRAM data bus.
47, 48	MD15, 14	I/O	DRAM data bus.
49	VDD	—	+5 V power supply.
50	GND	—	GND.
51~56	MD13~8	I/O	DRAM data bus.
57	VDD	—	+5 V power supply.
58	GND	—	GND.
59~64	MA0~5	O	DRAM address bus.
65	VDD	—	+5 V power supply.
66	GND	—	GND.
67~69	MA6~8	O	DRAM address bus.
70	$\overline{\text{RAS 1}}$	O	DRAM RAS signal.
71	$\overline{\text{RAS 0}}$	O	DRAM RAS signal.
72	$\overline{\text{CAS}}$	O	DRAM CAS signal.
73	VDD	—	+5 V power supply.
74	$\overline{\text{WE}}$	O	Write enable to DRAM.
75~77	NC	—	N. C.
78	VOE	I	Video data output enable.

Pin No.	Pin Name	I/O	Description
79, 80	GND	—	GND.
81	VDD	—	+5 V power supply.
82	NC	—	N. C.
83	FLDI	I	Field signal (odd/even)
84	HDI	I	Horizontal sync signal.
85	VDI	I	Vertical sync signal.
86	VDCLK	I	Video data output clock (13.5 MHz).
87	VDD	—	+5 V power supply.
88~91	VDATA23~20	O	Video data output bus.
92	GND	—	GND.
93	VDD	—	+5 V power supply.
94~97	VDATA19~16	O	Video data output bus.
98, 99	VDATA15, 14	O	Video data output bus.
100	VDD	—	+5 V power supply.
101	GND	—	GND.
102~105	VDATA13~10	O	Video data output bus.
106	VDD	—	+5 V power supply.
107	GND	—	GND.
108~112	VDATA9~5	O	Video data output bus.
113	VDD	—	+5 V power supply.
114	GND	—	GND.
115~119	VDATA4~0	O	Video data output bus.
120	VDD	—	+5 V power supply.
121, 122	GND	—	GND.
123	DO	O	Video data output bus.
124	BCK	O	Video data output clock.
125	LRCK	O	L/R channel identification signal.
126	MCLK	O	Audio master clock.
127	NC	—	N. C.
128	AUCLK	I	Internal audio decoder system clock.
129	VDD	—	+5 V power supply.
130~132	NC	—	N. C.
133	VDD	—	+5 V power supply.
134	$\overline{\text{RESET}}$	I	Reset signal.
135	CLK	I	System clock (27 MHz)
136	GND	—	GND.
137	$\overline{\text{DS}}$	I	Data strobe signal.
138	R/$\overline{\text{W}}$	I	Read/write select.
139	$\overline{\text{CS}}$	I	Chip select.
140~145	HADR0~5	I	Host address bus.
146, 147	GND	—	GND.

Pin No.	Pin Name	I/O	Description
148	INT	O	Interrupt signal.
149	$\overline{\text{HDAK}}$	O	Bus cycle response signal.
150	VDD	—	+5 V power supply.
151	GND	—	GND.
152~157	HD15~10	I/O	Host data bus.
158	VDD	—	+5 V power supply.
159, 160	GND	—	GND.

IC, μPD63210GT

Pin No.	Pin Name	I/O	Description
1	TSEL	I	Test selection input.
2	RST	I	Reset input.
3	XTO	O	External crystal oscillator is connected to this pin.
4	XTI	I	External crystal oscillator is connected to this pin.
5	MCKO	O	Master clock output.
6	CKSEL	I	Clock selection input.
7	CLK	I	Bit clock input.
8	SI	I	Data input.
9	LRCK	I	LR clock input.
10	DEFS1	I	Deemphasis selection input 1.
11	DEFS2	I	Deemphasis selection input 2.
12	DSEL	I	Double speed playback selection input..
13	SMUTE	I	Soft mute selection input.
14	BSEL	I	Data bit length selection input.
15	DGND	—	Digital GND.
16	AGND	—	Analog GND.
17	RO	O	D/A converter output (R channel).
18	AOR	O	Filter amplifier output (R channel).
19	ANIR	I	Filter amplifier (-) input (R channel).
20	APIR	I	Filter amplifier (+) input (R channel).
21	RREF	—	Reference (R channel).
22	LREF	—	Reference (L channel).
23	APIL	I	Filter amplifier (+) input (L channel).
24	ANIL	I	Filter amplifier (-) input (L channel).
25	AOL	O	Filter amplifier output (L channel).
26	LO	O	D/A converter output (L channel).
27	AVDD	—	Analog power supply.
28	DVDD	—	Digital power supply.

IC, TC170C100AF

Pin No.	Pin Name	I/O	Description
1~5	YIN4~0	I	Y signal from MPEG chip.
6	GND	—	GND.
7~14	UIN7~0	I	U signal from MPEG chip.
15	GND	—	GND.
16, 17	VIN7, 6	I	V signal from MPEG chip.
18	VCC	—	Power supply terminal.
19~24	VIN5~0	I	V signal from MPEG chip.
25	GND	—	GND.
26	FLDO	O	Odd/even signal output of a field.
27	$\overline{\text{HDO}}$	O	$\overline{\text{HSYNC}}$ signal to MPEG chip.
28	$\overline{\text{VDO}}$	O	$\overline{\text{VSYNC}}$ signal to MPEG chip.
29	PCP	O	Clamp signal output.
30	CBLK	O	Blanking signal output (used depending upon type of DAC).
31	GND	—	GND.
32	FSC	O	Sub carrier output (Divided-by-four of NTSC: 14.31818 MHz. PAL: 17.734475 MHz).
33	CDG/$\overline{\text{MPEG}}$	O	CD-G or MPEG play selector signal to external RGB video selector.
34	TEST0	I	Operation mode setting terminal.
35	GND	—	GND.
36	13.5M	O	13.5 MHz output.
37	GND	—	GND.
38~43	R OUT7~2	O	Y/R signal output (Output format can be selectable in Y/R).
44	GND	—	GND.
45, 46	R OUT1, 0	O	Y/R signal output (Output format can be selectable in Y/R).
47~54	G OUT7~0	O	U/G signal output (Output format can be selectable in U/G).
55	VCC	—	Power supply terminal.
56~63	B OUT7~0	O	V/B signal output (Output format can be selectable in V/B).
64	GND	—	GND.
65	27M	I	27 MHz input.
66	TEST1	I	Operation mode setting terminal.
67	SHSYNC	O	Comparison clock for PLL synchronizing CLK.
68	MHSYNC	O	Reference clock for PLL synchronizing CLK.
69	VCC	—	Power supply terminal.
70	OSC1	I	14.31818 MHz input port (crystal oscillation) when supporting NTSC.
71	OSC2	O	NTSC: 14.31818 MHz crystal oscillation output terminal.
72, 73	GND	—	GND.
74	OSC3	I	17.734475 MHz input port (crystal oscillation) when supporting PAL.
75	OSC4	O	17.734475 MHz crystal oscillation output terminal.
76	VCC	—	Power supply terminal.
77, 78	TEST2, 3	I	Operation mode setting terminal.
79	FMOD	I	FLD0 output HL inversion selection signal.
80	PMOD	I	PCP output HL inversion selection signal.

Pin No.	Pin Name	I/O	Description
81	GND	—	GND.
82~85	T15~T12	I	RAM data input terminals 15 - 12 during RAM check.
86	T11OP3	I/O	OUT port terminals 3 - 0 (address 4). RAM data input terminals 11 - 8 during RAM check.
87	T10OP2	I/O	OUT port terminals 3 - 0 (address 4). RAM data input terminals 11 - 8 during RAM check.
88	T9OP1	I/O	OUT port terminals 3 - 0 (address 4). RAM data input terminals 11 - 8 during RAM check.
89	T8OP0	I/O	OUT port terminals 3 - 0 (address 4). RAM data input terminals 11 - 8 during RAM check.
90	VCC	—	Power supply terminal.
91	$\overline{\text{GHSYNC}}$	I	$\overline{\text{HSYNC}}$ signal from CD-G decoder.
92	$\overline{\text{GVSYNC}}$	I	$\overline{\text{VSYNC}}$ signal from CD-G decoder.
93	$\overline{\text{GCSYNC}}$	I	$\overline{\text{CSYNC}}$ signal from CD-G decoder.
94	GND	—	GND.
95~98	T7~4	I	RAM data input terminals 7 - 4 during RAM check.
99	T3IP3	I	IN port terminals 3 - 0 (address 5). RAM data input terminals 3 - 0 during RAM check.
100	T2IP2	I	IN port terminals 3 - 0 (address 5). RAM data input terminals 3 - 0 during RAM check.
101	T1IP1	I	IN port terminals 3 - 0 (address 5). RAM data input terminals 3 - 0 during RAM check.
102	T0IP0	I	IN port terminals 3 - 0 (address 5). RAM data input terminals 3 - 0 during RAM check.
103	GND	—	GND.
104	4FSC	O	104 NTSC: 14.31818 MHz. PAL: 17.734475 MHz buffer output.
105	GND	—	GND.
106	RAMCE	I	Chip enable signal for checking internal RAM and ROM check. (Fixed to low normally).
107	RAMW	I	Read/write signal for checking internal RAM and ROM check. (Fixed to low normally).
108	XT2C	I	XT2C input (used for HYNC DL delay).
109	GND	—	GND.
110	$\overline{\text{RST}}$	I	Input port of the reset signal.
111	GND	—	GND.
112	PAL/$\overline{\text{NTSC}}$	I	PAL/NTSC selector port.
113	HSYNCIN	O	Inverted output of $\overline{\text{HYNSC}}$ IN.
114	$\overline{\text{HSYNCIN}}$	I	$\overline{\text{SYNC}}$ signal from VST (only when supporting FMV engine).
115	$\overline{\text{VSYNCIN}}$	I	$\overline{\text{VSYNC}}$ from VSC. (only when supporting FMV engine).
116	GND	—	GND.
117~124	D7~0	I/O	CPU data bus signal.

Pin No.	Pin Name	I/O	Description
125	VCC	—	Power supply terminal.
126	CMOD	I	CLBK output HL inversion selection signal.
127	$\overline{\text{VOD}}$	I	Video output disable.
128	VCD/$\overline{\text{FMV}}$	I	VIDEO CD/DMV engine selection port.
129	$\overline{\text{CS}}$	I	Chip select signal.
130	$\overline{\text{RD/LDS}}$	I	READ signal from CPU $\overline{\text{RD}}$ (when supporting H8). $\overline{\text{LD}}$ (when supporting 680009).
131	$\overline{\text{WR/R/W}}$	I	$\overline{\text{WRITE}}$ signal from CPU $\overline{\text{WR}}$ (when supporting H8). R/W (when supporting 680009).
132~134	A2~0	I	Address signal from CPU.
135	H8/$\overline{68}$	I	CPU H8-325/68000 selection port.
136	GND	—	GND.
137	$\overline{\text{HSYNCO}}$	O	Horizontal sync output.
138	$\overline{\text{VSYNCO}}$	O	Vertical sync output.
139	$\overline{\text{CSYNCO}}$	O	Composite sync output. $\overline{\text{CSYNC}}$ signal from video encoder.
140	SMOD	I	13.5 MHz ↑ ↓ selection of SYNC signal output. Selection is possible at the final stage of $\overline{\text{HDO}}$, $\overline{\text{VDO}}$, $\overline{\text{HSYNCO}}$, $\overline{\text{VSYNCO}}$, $\overline{\text{CSYNCO}}$, SHYNC, PCP, CBLK, FLDO. (However, $\overline{\text{HSYNCO}}$, $\overline{\text{VSYNCO}}$, $\overline{\text{CSYNCO}}$ are supported during SYNC output of the CD-G decoder.)
141	VCC	—	Power supply terminal.
142~144	YIN7~5	I	Y signal from MPEG chip.

IC, MB89627

Pin No.	Pin Name	I/O	Description
1	CCLK	O	SSP, DSP Control Clock.
2	DATA	O	SSP, DSP Control Data.
3	SENS	I	SSP, DSP Status.
4	XLAT	O	SSP, DSP Command Latch.
5	XRST	O	SSP, DSP Reset.
6	TVMSW	O	OFF/NTSC/PAL/PAL60/PAL AUTO/AUTO/TEST. *NOTE
7	DMUTE	O	Digital Mute.
8	AMUTE	O	Analog Mute.
9	LDON	O	Servo PCB Power on.
10	VCDRST	O	Video CD Reset.
11	OPTON	O	Optical Digital Output ON.
12	VCC	—	A/D Converter VCC.
13	VCC	—	A/D Converter VREF.
14	VSS	—	A/D Converter VSS.
15	HOSTIRQ	I	Host CPU Interrupt Request.
16	SCOR	I	Subcode Sync 0. (Subcode IRQ)
17	ILSW	I	Inter Limit Switch.
18	VCDIRQ	I	Video CD Decoder Interrupt Request.
19	N. C.	I	Not used.
20	RST	I	CPU Reset.
21	MODE0	I	CPU MODE. (Pull-down)
22	MODE1	I	CPU MODE. (Pull-down)
23	CLKIN	O	8MHz System Clock.
24	CLKOUT	I	8MHz System Clock.
25	VSS	—	GND.
26	ALE	O	Address Latch Strobe.
27	RD	O	Data Read Strobe.
28	WR	O	Data Write Strobe.
29	CLK	O	Clock out.
30	READY	I	Video CD Decoder Ready.
31	OSDCS	O	OSDC Enable.
32	OSDCLK	O	OSDC Data Clock.
33	OSDSIN	O	OSDC Data.
34~41	A8~A15	O	Address Bus 8~15.
42~49	AD0~AD7	I/O	Address/Data Bus 0~7.
50	VSS	—	GND.
51	VCD/CDG	O	Video CD/CDG Switch.
52	HCLK	I	Host CPU Control Clock.
53	ST	O	Host CPU Control Send Data.
54	RT	I	Host CPU Control Receive Data.
55	TRACK	I	Travase Counter.

Pin No.	Pin Name	I/O	Description
56	ENCRST	O	Video Encoder Reset.
57	DVCC	—	DVCC.
58	PAL/PAL60	O	PAL/PAL60 Switch.
59	XNTSC	O	PAL/NTSC Switch.
60	SQCK	O	Subcode Q Read Clock.
61	SQSO	I	Subcode Q Serial Data.
62	BUSY	I/O	Host CPU I/F Busy Signal.
63	FOK	I	Focus Servo OK Detect.
64	GFS	I	Frame Sync Detect.

Note

- Analog input (TVMSW: 6 pin) of the microprocessor is divided into 7, then controlled.
- The output are the command setting (Set Video Format) to the two ports of PAL/PAL60 (58 pin), XNTSC (59 pin) and IC301 (CL484).

TVMSW (6 pins)		DISC encoding system	TV output mode	PAL/PAL60 (58 pins)	XNTSC (59 pins)	Set Video Format
Volt (V)	Mode					
5.00	OFF	—	Not used (NTSC output mode).			
4.58	NTSC	—	NTSC	H	L	NTSC
3.75	PAL	—	PAL	H	H	PAL
2.92	PAL60	—	PAL60	L	H	NTSC
2.08	PAL AUTO	NTSC	PAL60	L	H	NTSC
		PAL	PAL	H	H	PAL
1.25	AUTO	NTSC	NTSC	H	L	NTSC
		PAL	PAL	H	H	PAL
0.42	TEST	—	For servo circuit adjustment (NTSC output mode).			
0.00						

*1 As to identification of the disc encoding system, it is identified from the V_SIZE (1A1h/word) of the MPEG data.

*2 "For servo circuit adjustment" is the process during adjustment (when variable resistor is operated by service engineer) that the microprocessor enters the emergency process routine if the servo system goes extremely out of the servo range.

*3 In addition to the above, ENCRST (56 pin) is the reset signal for TV encoder, issues the active "L" pulse when each of the input port of CDGSW, NTB, CVSY, HSY, PIXCLK, GCLK, PAL60B and VCLK of IC401 (BU1417AK) has changed as follows:

① When the power is supplied to the circuit boards of the CD block,

② When starting to reach TOC.

③ The modes have changed as follows:

- TVMSW is switched.
- Switching of encoding system owing to exchange of video CD disc
- Exchange of video CD disc with the CD-DA or CD-G.

IC, CL484

Pin No.	Pin Name	I/O	Description
1	HSEL2	I	Host address bus.
2	-DS	I	Data strobe.
3	R/-W	I	Read/write.
4	CFLEVEL	O	Coded data FIFO level status. Open drain.
5	-DACK	O	Host data acknowledge. Open drain.
6	HD0	I/O	Host data bus.
7	VDD3	—	Power supply pin. Used in 3.3 V.
8, 9	HD1, HD2	I/O	Host data bus.
10	VSS	—	GND.
11~15	HD3~HD7	I/O	Host data bus.
16	VSS	—	GND.
17	-TEST	I	Test terminal. Normally fixed to High.
18	VSS	—	GND.
19	XTL IN	I	Global clock. 40.5 MHz.
20	XTL OUT	O	Global clock. 40.5 MHz.
21, 22	VDD3	—	Power supply pin. Used in 3.3 V.
23~28	MD0~MD5	I/O	Memory data bus.
29	VDD3	—	Power supply pin. Used in 3.3 V.
30, 31	MD6, MD7	I/O	Memory data bus.
32, 33	-MCE0, -MCE1	O	Chip enable.
34~37	MD8~MD11	I/O	Memory data bus.
38	VSS	—	GND.
39~42	MD12~MD15	I/O	Memory data bus.
43	VDDMAX	—	Power supply pin. Used in 5.0 V.
44	-LCAS	O	Lower digit, column address strobe.
45	-LCASIN	I	Lower digit, data latch enable.
46	VSS	—	GND.
47	-MWE	O	Write enable.
48	-UCAS	O	Higher digit, column address strobe.
49	VDD3	—	Power supply pin. Used in 3.3 V.
50	-UCASIN	I	Higher digit, data'latch enable.
51, 52	RAS0, RAS1	O	Lower address strobe.
53~57	MA9~MA5	O	Memory address bus.
58	VSS	—	GND.
59~63	MA4~MA0	O	Memory address bus.
64	RESERVED	—	Reserved.
65	VDD3	—	Power supply pin. Used in 3.3 V.
66~72	VD0~VD6	O	Pixel data bus. RGB or YCbCr format.
73	VSS	—	GND.
74~76	VD7~VD9	O	Pixel data bus. RGB or YCbCr format.
77	VDD3	—	Power supply pin. Used in 3.3 V.

Pin No.	Pin Name	I/O	Description
78~80	VD10~VD12	O	Pixel data bus. RGB or YCbCr format.
81	VDD3	—	Power supply pin. Used in 3.3 V.
82~84	VD13~VD15	O	Pixel data bus. RGB or YCbCr format.
85	VSS	—	GND.
86~89	VD16~VD19	O	Pixel data bus. RGB or YCbCr format.
90	VSS	—	GND.
91~94	VD20~VD23	O	Pixel data bus. RGB or YCbCr format.
95	-VSYNC or CSY	I/O	Vertical sync signal.
96	-HSYNC	I/O	Horizontal sync signal.
97	-VOE	I	Video output enable.
98	VDD3	—	Power supply pin. Used in 3.3 V.
99	VCLK	I/O	Video clock.
100	VSS	—	GND.
101	-RESET	I	Hardware reset.
102	VSS	—	GND.
103	CD-C2PO	I	Data error. Used during CD-ROM data input.
104	CD-LRCK	I	LR clock.
105	CD-DATA	I	Serial data input from CD-DSP.
106	CD-BCK	I	Bit clock from CD decoder.
107	DA-LRCK	O	LR clock.
108	DA-DATA	O	Bit serial audio sample signal.
109	DA-BCK	O	Audio bit clock.
110	VDD3	—	Power supply pin. Used in 3.3 V.
111	DA-XCLK	I	External audio frequency clock.
112	VDD3	—	Power supply pin. Used in 3.3 V.
113	-INT	O	Interrupt request.
114	CDG-S0S1	I	Block start sync.
115	HOST_ENA	I	Host enable.
116	RAM_ENA	I	Boot ROM enable.
117	CDG-VFSY	I	Frame start or composite sync.
118	DAC_EMP	O	Output emphasis flag.
119	CDDA_EMP	I	Input emphasis flag.
120	CDG-SDATA	I	Subcode data.
121	CDG-SCLK	I/O	Subcode data clock.
122	CDDA/VCD	O	Input data identification. H: CDDA. L: video CD.
123	VDDMAX	I	Power supply pin. Used in 5.0 V.
124	FSC1	O	Output generated by dividing-by-4 the pin-126 input CLK.
125	VSS	—	GND.
126	FSC4	I	Frequency divider input.
127, 128	HSEL0, HSEL1	I	Host address bus.

IC, BU1417AK

Pin No.	Pin Name	I/O	Description
1	BOSD	I	OSD Blue Data input.
2	GD0	I	Green Data Bit 0. (LSB)
3~8	GD1~GD6	I	Green Data Bit 1~6.
9	GND	—	Digital ground.
10	GD7	I	Green Data Bit 7. (MSB)
11	BD0	I	Blue Data Bit 0. (LSB)
12~14	BD1~BD3	I	Blue Data Bit 1~3.
15	OSDSW	I	OSD input enable.
16	CDGSWB	I	Select Video-CD/$\overline{\text{CD-G}}$.
17~19	BD4~BD6	I	Blue Data Bit 4~6.
20	BD7	I	Blue Data Bit 7. (MSB)
21	GND	—	Digital ground.
22	NTB	I	Select $\overline{\text{NTSC}}$/PAL mode.
23, 24	IM0, IM1	I	Input mode set Bit 0, 1.
25, 26	TEST1, TEST2	I	Normally pulldown to GND.
27	CVSY	I	C-SYNC or V-SYNC input.
28	HSY	I	H-SYNC input.
29	PIXCLK	O	1/2 Freq. of internal CL.
30	BLKB	I	Data blanking $\overline{\text{ENABLE}}$.
31	VDD	—	Digital VDD.
32	INT	I	INTERLACE/$\overline{\text{NON-INTERLACE}}$.
33	SLABEB	I	Set mode MASTER/$\overline{\text{SLABE}}$.
34	ADDH	I	ADD One_line at Non-inter.
35	VREF	I	Reference voltage. (1.29V)
36	CGND	—	Chroma output ground.
37	COUT	O	Chroma output.
38	VGND	—	Composite output ground.
39	VOUT	O	Composite output.
40	AVSS	—	Analog (DAC, VREF) ground.
41	NC	—	Not used.
42	IR	I	Reference resistor. (1.2K)
43	AVDD	—	Analog (DAC, REF) VDD.
44	YGND	—	Luminance output ground.
45	YOUT	O	Luminance output.
46	G4FSC	I	Pulldown to GND.
47	GCLK	I	Video clock input for CD-G.
48	YCOFF	I	DAC (YOUT, COUT) off.
49	YFILON	I	Pulldown to GND.
50	PAL60B	I	$\overline{\text{PAL60 ON}}$ at NTB=HIGH.
51	VCLK	I	Video clock input for VCD.
52	RSTB	I	Logic part initial reset.

Pin No.	Pin Name	I/O	Description
53	CLKSW	I	Divide input CLK $\overline{\text{ENABLE}}$.
54	RD0	I	Red data Bit 0. (LSB)
55, 56	RD1, RD2	I	Red data Bit 1, 2.
57	ROSD	I	OSD Red data input.
58~60	RD3~RD5	I	Red data Bit 3~5.
61	VDD	—	Digital VDD.
62	RD6, RD7	I	Red data Bit 6, 7.
63	GOSD	I	OSD green data input.

IC, BU2173AF

Pin No.	Pin Name	I/O	Description
1	VDD	—	Digital VDD.
2	TSTO	O	Open during normal mode. (Used in test mode.)
3	XTALI	I	Reference oscillator input.
4	XTALO	O	Reference oscillator output.
5	CTRLA	I	CD-G/VCD clock selector terminal.
6	CTRLB	I	Fixed to "H" during normal mode.
7	CTRLC	I	CD-G PAL/NTSC clock selector terminal.
8	TSTI	I	Connected to Vss during normal mode. (Used in test mode.)
9	VSS	—	Digital GND.
10	AVSS	—	Analog GND.
11	FOUT3	O	Not used. Open during normal mode.
12	VSSIO	—	I/O GND.
13	FOUT2	O	Clock output (2).
14	TEST	—	Test mode setting. Connected to Vss during normal mode.
15	FOUT1	O	Clock output (1).
16	VDDIO	—	I/O VDD.
17	FOUT4	O	Clock output (4).
18	AVDD	—	Analog VDD.

TEST MODE

1. How to Activate CD Test Mode
   Insert the AC plug while pressing the function CD button.
   All FL display tubes will light up, and the test mode will be activated.

2. How to Cancel CD Test Mode
   Either one of the following operations will cancel the CD test mode.
   - Press the function button. (except CD function button)
   - Press the power switch button.
   - Disconnect the AC plug

3. CD Test Mode Functions
   When test mode is activated, the following mode functions from No.1 to No.5 can be used by pressing the operation keys.

Mode/No.	Operation	FL display	Operation	Contents
Start mode No.1	Activation	All lamps light	• Test mode is activated. • Laser diode turns always ON. (CD block power is ON.)	• FL display check (All displays light.) • APC circuit check • Laser current measurement (Laser current control. Across a resistor connected between emitter and GND.)
Search mode No.2	■ key	C1--	• Continual focus search (The pickup lens repeats the full-swing up-down motion.) * Avoid continual searches that last for more than 10 minutes. * NOTE 1	FOCUS SERVO • Check focus search waveform • Check focus error waveform (FOK/FZC are not monitored in the search mode)
Play mode No.3	◀▶ key	C11	• Normal playback • Focus search is continued if TOC cannot be read. * NOTE 1	FOCUS SERVO/TRACKING SERVO CLV SERVO/SLED SERVO Check FOK/FZC
Traverse mode No.4	❚❚ key	C11	• During normal disc playback Press once; tracking servo OFF Press twice; tracking servo ON * NOTE 2	TRACKING SERVO ON/OFF Tracking balance (traverse) adjustment
Sled mode No.5	⏮ key ⏭	All lamps light	• Pickup moves to the outermost track • Pickup moves to the innermost track * NOTE 3 (During playback, machine operates normally.)	SLED SERVO Check SLED mechanism operation

* NOTE 1: There are cases when the tracking servo cannot be locked owing to the protection circuit being operated when heat builds up in the driver IC if the focus search is operated continually for more than 10 minutes. In these cases the power supply should be switched off for 10 minutes until heat has been reduced and then re-started.
* NOTE 2: Do not press the ⏮ or ⏭ keys when the machine is in the ❚❚ status is active. If they are pressed, playback will not be possible after the ❚❚ status has been canceled. If the ⏮ or ⏭ keys are pressed in the ❚❚ status, press the ■ key and return to the start mode (No.1).
* NOTE 3: When pressing the ⏮ or ⏭ keys, take care to avoid damage to the gears. Because the sled motor is activated when the ⏮ or ⏭ keys are pressed, even when the pick-up is at the outermost or innermost track.

4. Operation Outline
   The operation of each mode is carried out in the direction of the arrows from the start mode as indicated in the following illustration.

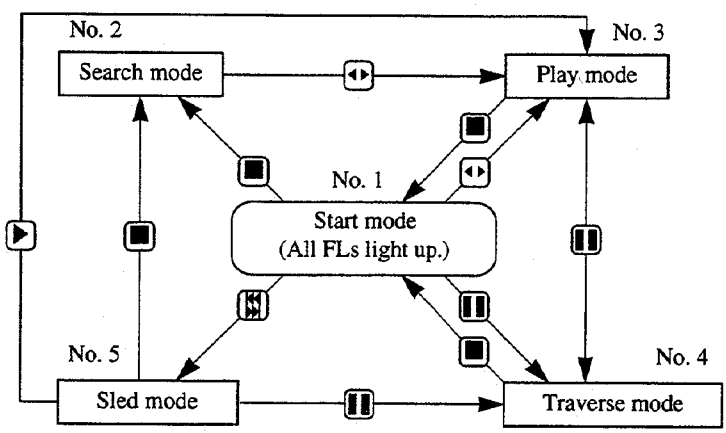

If the DISC DIRECT PLAY button is pressed, the machine performs the same operation as the PLAY button is pressed as shown. If the tray is opened by pressing OPEN/CLOSE button during Play mode or Traverse mode, the machine returns to the Start mode.

B CD MECHA C.B

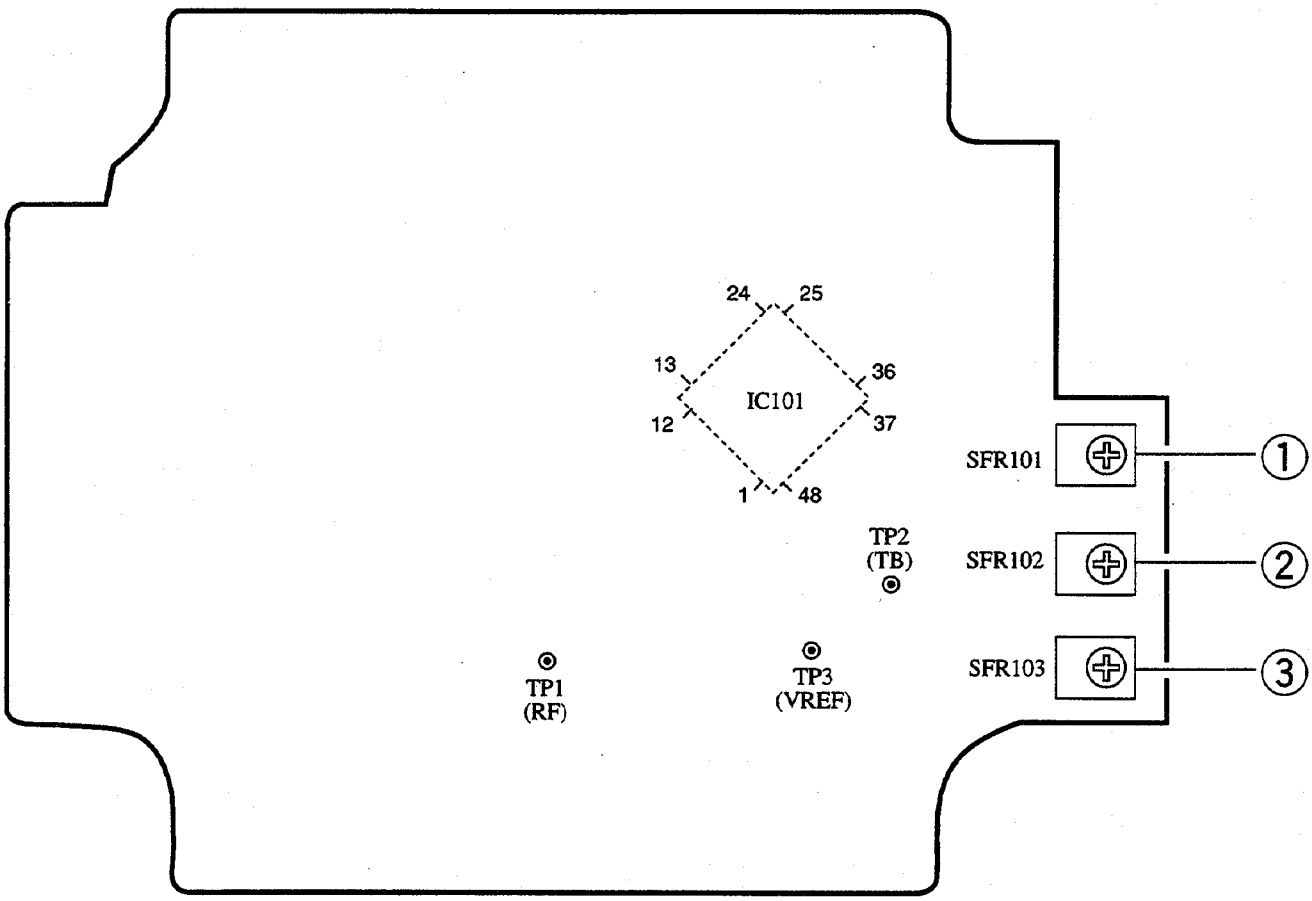
24
25
13
36
IC101
12
37
1
48
SFR101
1
TP2
(TB)
SFR102
2
TP1
(RF)
TP3
(VREF)
SFR103
3

Note: Connect a probe (10: 1) of the oscilloscope or the frequency counter to a test point.

1. Focus Bias Adjustment

Make the focus bias adjustment when replacing and repairing the optical block.

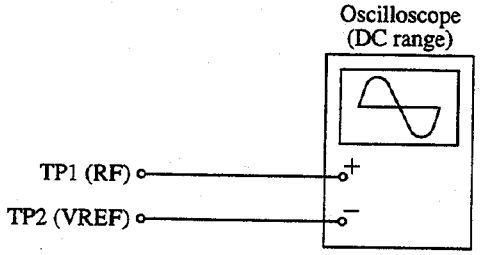

1) Connect an oscilloscope to test points TP1 (RF) and TP2 (VREF).
2) Turn on the power switch.
3) Insert test disc TCD-782 (YEDS-18) and play back the second composition.
4) Adjust SFR101 so that RF signal of test point TP1 (RF) is MAX and CLEARREST.

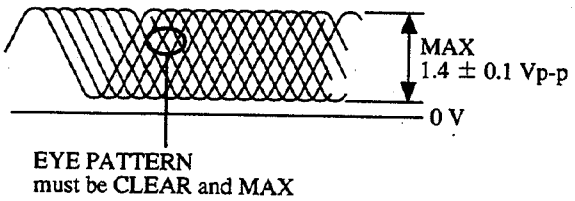

VOLT/DIV : 50mV
TIME/DIV : 0.5μS

Note: The current of the laser signal can be checked with the voltages on both sides of R127 (10Ω). The difference for the specified value shown on the lavel must be within± 6.0mA.

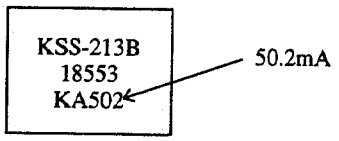

$$\text{Laser current Iop} = \frac{\text{Voltage across R127}}{10\Omega}$$

2. Tracking Balance Adjustment

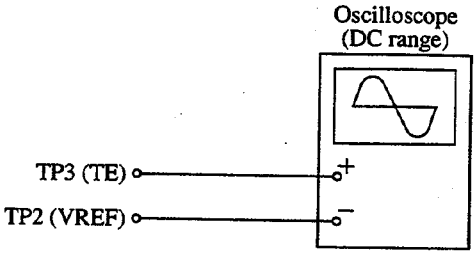

1) Connect an oscilloscope to test points TP3 (TE) and TP2 (VREF).
2) Turn on the power switch.
3) Insert test disc TCD-782 (YEDS-18) and press the PLAY button.
4) Adjust SFR103 to decrease the tracking gain.
5) Adjust SFR102 so that the waveform on the oscilloscope is vertically symmetrical as shown in the figure below.
6) After the adjustment is completed, remove the connected lead wires from the terminals.

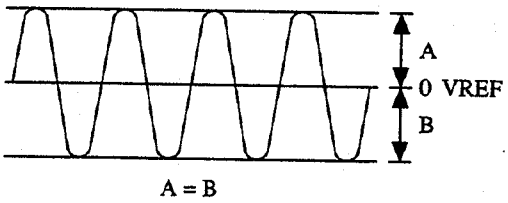

VOLT/DIV : 20mV
TIME/DIV : 1mS

3. Tracking Gain Adjustment

A servo analyzer is necessary in order to perform this adjustment exactly. However, this gain has a margin, so even if it is slightly off, there is no problem. Therfore, do not perform this adjustment.
Focus/tracking gain determines the pick-up follow-up (vertical and horizontal) relative to mechanical noise and mechanical shock when 2-axis device operates. However, as these reciprocate, the adjustment is at the point where both are satisfied.

- When gain is raised, the noise increases when the 2-axis device operates.
- When gain is lowered, it is more susceptible to mechanical shock and skipping occurs more easily.

When the gain adjustment is off, the symptoms below appear.

Symptoms \ Gain	(Focus)	Tracking
● The time until music starts becomes longer for STOP→▶PLAY or automatic selection (⏮, ⏭ buttons pressed.) (Normally takes about 2 seconds.)	low	low or high
● Music does not start and disc continues to rotate for STOP →▶PLAY or automatic selection (⏮, ⏭ buttons pressed.)	—	low
● Disc stops to rotate shortly after STOP→▶PLAY.	low or high	—
● Sound is interrupted during PLAY. Or time counter display stops.	—	low
● More noises during the 2-axis device operation.	high	high

The following is simple adjustment method.

— Simple adjustment —

Note: Since the exact adjustment cannot be performed, remember the positions of the controls before the performing the adjustment. If the positions after the simple adjustment are only a little different, return the controls to the original position.

Procedure:

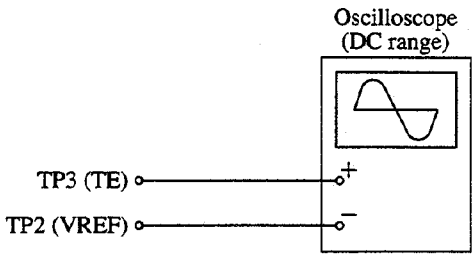

1) Keep the set horizontal. (If the set is not kept horizontally, this adjustment cannot be performed due to the gravity against the 2-axis device.)
2) Insert test disc TCD-782 (YEDS-18) and play back the second composition.
3) Connect an oscilloscope to TP3 (TE), TP2 (VREF) of the CD MECHA C.B.
4) Adjust SFR103 so that the waveform appears as shown in the figure below. (tracking gain adjustment)

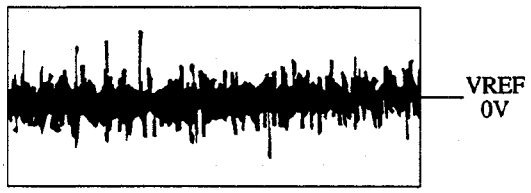

VOLT/DIV: 50 mV
TIME/DIV: 1mS

● Incorrect example

Low tracking gain

The fundamental wave appears as compared with the waveform adjusted.

VOLT/DIV: 50 mV
TIME/DIV: 1mS

High tracking gain

The frequency of the fundamental wave is higher than that in low gain.

VOLT/DIV: 50 mV
TIME/DIV: 1mS

MECHANICAL EXPLODED VIEW 1 / 1

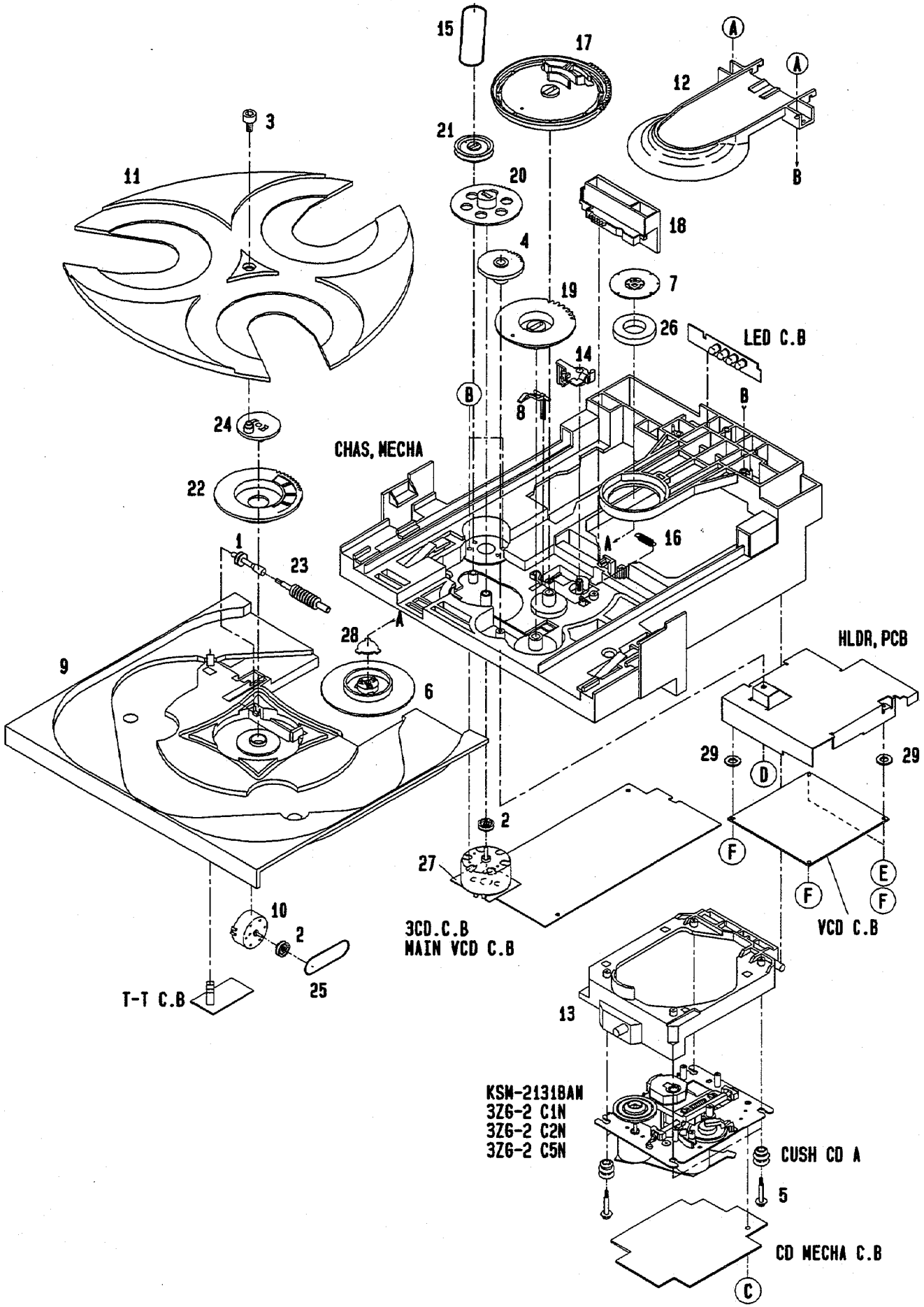

MECHANICAL PARTS LIST 1 ／ 1

DESCRIPTIONで判断できない物は "REFERENCE NAME LIST" を参照してください。
If can't understand for Description please kindly refer to "REFERENCE NAME LIST".

REF. NO	PART NO.	カンリ NO.	DESCRIPTION
1	84-ZG1-239-11K		PULLY,WORM N
2	81-ZG1-212-01K		PULLY,LOAD MO
3	81-ZG1-239-019		S-SCREW,TT
4	81-ZG1-291-019		GEAR,TRAY RELAY NO3
5	81-ZG1-271-019		S-SCREW,MECH REAR
6	81-ZG1-277-219		HLDR,MAGNET N
7	81-ZG1-255-119		PLATE,MAGNET MK2
8	83-ZG3-213-019		LVR,SW
9	84-ZG1-003-219		TRAY,NO2-B
10	87-045-364-019		MOTOR,(BCH3B14)
11	84-ZG1-005-119		TURNTABLE,NO1
12	84-ZG1-010-019		IND,CD N<V3L,V4L>
12	84-ZG1-011-019		REFLECTOR,CD<A,B,Z,V5>
13	84-ZG1-212-119		HLDR,MECHA NO2
14	84-ZG1-208-019		LEVER,CAM
15	84-ZG1-209-010		BELT,SQ1.8-117.7
16	84-ZG1-211-019		SPR-E CAM S
17	84-ZG1-215-219		GEAR,MAIN CAM BLU
18	84-ZG1-216-219		SLIDE,MECHA CAM YEL
19	84-ZG1-205-119		GEAR,TRAY
20	84-ZG1-206-119		GEAR,RELAY
21	84-ZG1-219-019		PULLY,RELAY BGE
22	84-ZG1-221-019		GEAR,MAIN TT
23	84-ZG1-238-01K		GEAR,WORM N
24	84-ZG1-224-019		LEVER,TT
25	84-ZG1-225-010		BELT,SQ1.0-63.3
26	87-036-326-010		MAGNET,CLAMPER 93<A,B,Z,WR,V5>
26	83-ZG3-602-010		RING,MAG<V3L,V4L>
27	80-CD3-214-019		CUSH CD A
28	84-ZG1-248-019		SPR-C,WORM
29	82-DW1-220-019		SPACER,DIA 3.6-8-0.24<V3L>
A	87-067-703-019		BVT2+3-10 (W/O SLOT)<EXCEPT WR>
B	87-251-070-419		U+2.6-3<Z>
C	87-342-036-219		UT2+2-8<V3L,V4L,V5>
D	87-067-579-019		BVT 2+3-8 W/O SLOT<V3L,V4L>
E	81-557-598-010		UTT+2-5 C-TITE<V4L>
F	87-067-767-019		BVTT+2.6-6<V3L>
G	87-067-058-019		FW,3.2-8-0.5<V4L>

CD MECHANISM EXPLODED VIEW 1 / 1 (3ZG-2 C5N <WR>)

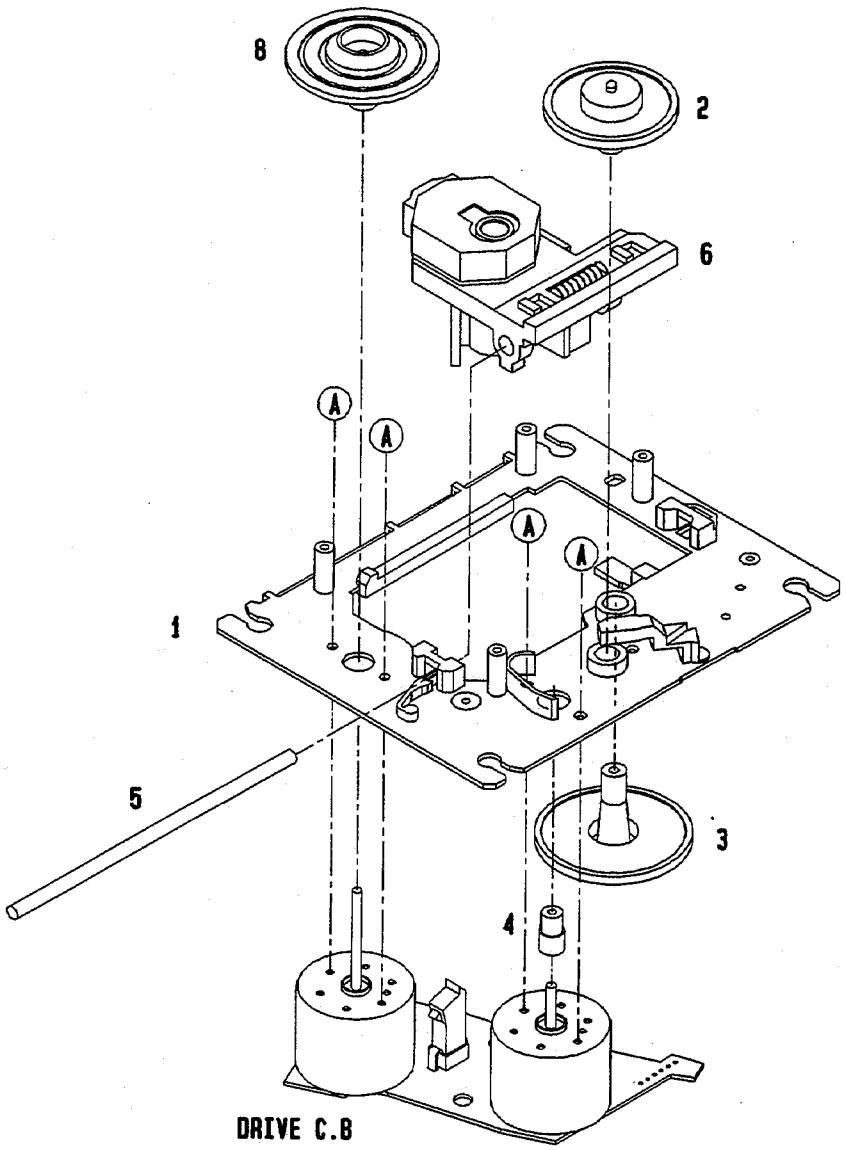

CD MECHANISM PARTS LIST 1 / 1 (3ZG-2 C5N <WR>)

DESCRIPTIONで判断できない物は "REFERENCE NAME LIST" を参照してください。
If can't understand for Description please kindly refer to "REFERENCE NAME LIST".

REF. NO	PART NO.	カンリ NO.	DESCRIPTION
1	83-ZG2-202-71K		O-SERT S ASSY,S
2	83-ZG2-204-419		GEAR,A
3	83-ZG2-205-219		GEAR,B
4	83-ZG2-220-01K		GEAR MOTOR 2
5	83-ZG2-207-119		SHAFT,SLIDE
6	87-070-445-010		PICK-UP,KSS-213B
8	83-ZG2-227-01K		TURN TABLE,C1
A	87-261-032-219		SCREW V+2-3

CD MECHANISM EXPLODED VIEW 1 ／ 1 (3ZG-2 C1N <V3L/V4L/V5>)

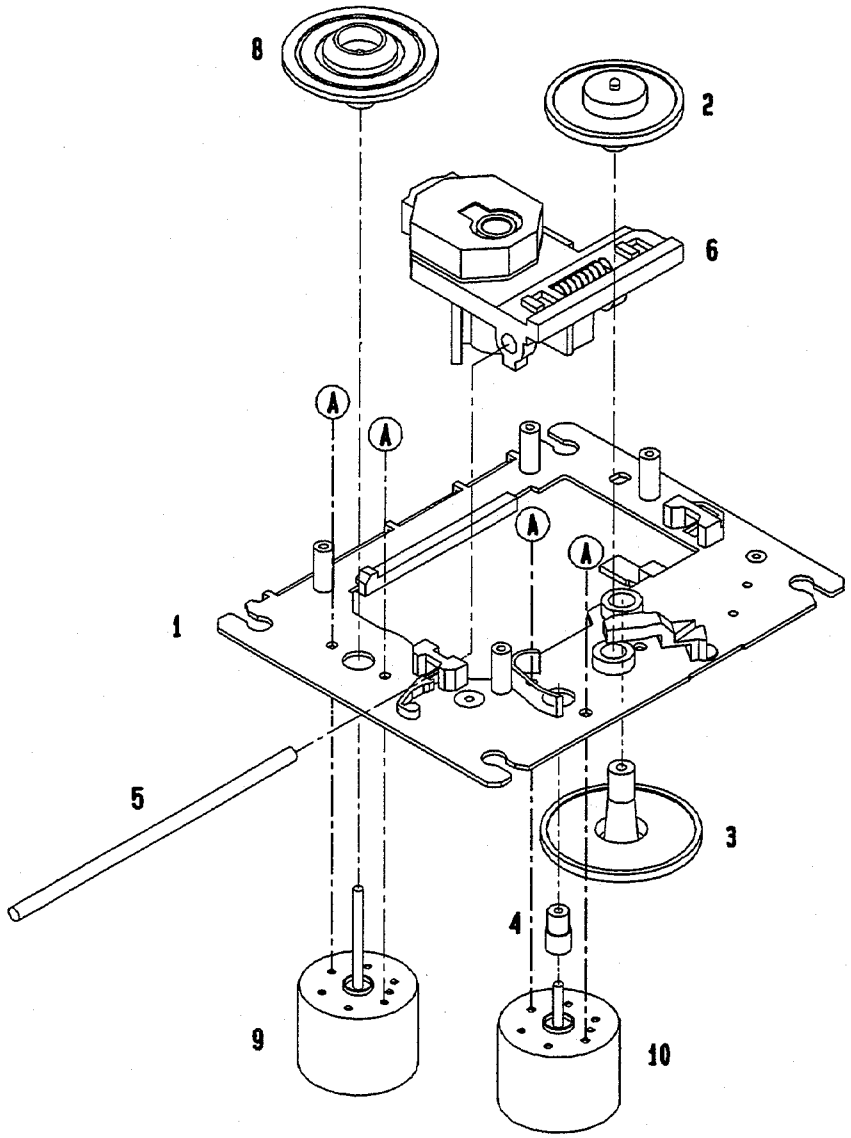

CD MECHANISM PARTS LIST 1 ／ 1 (3ZG-2 C1N <V3L/V4L/V5>)

DESCRIPTIONで判断できない物は "REFERENCE NAME LIST" を参照してください。
If can't understand for Description please kindly refer to "REFERENCE NAME LIST".

REF. NO	PART NO.	カンリ NO.	DESCRIPTION
1	83-ZG2-202-71K		O-SERT S ASSY,S
2	83-ZG2-204-419		GEAR,A
3	83-ZG2-205-219		GEAR,B
4	83-ZG2-220-01K		GEAR MOTOR 2
5	83-ZG2-207-119		SHAFT,SLIDE
6	87-070-445-010		PICK-UP,KSS-213B
8	83-ZG2-233-019		TURN TABLE,A5
9	87-045-358-019		MOT,RF-310T A 43
10	87-045-356-019		MOT,RF-310T A 30
A	87-261-032-219		SCREW V+2-3

4ZG-1A

ELECTRICAL MAIN PARTS LIST

DESCRIPTION で判断できない物は "REFERENCE NAME LIST" を参照してください。
If can't understand for Description please kindly refer to "REFERENCE NAME LIST".

REF. NO.	PART NO.	カンリ NO.	DESCRIPTION
IC			
	87-070-294-019		IC,CXD2508AQ
	87-017-745-019		IC,CXA1782BQ
	87-017-888-089		IC,NJM4558MD
	87-070-305-019		IC,BA6897S
	87-001-982-019		IC,TA7291S
	87-017-802-010		IC,LC7872E<G>
	87-017-803-010		IC,LC32464P-80<G>
TRANSISTOR			
	87-026-239-089		C-TR,DTC114TK
	89-110-373-089		C-TR,2SA1037 S
	89-420-052-089		TR 2SD2005Q (T105)
	89-421-722-389		TR,2SD2172 V/W
	89-320-011-089		TR,2SC2001K
	87-026-223-089		C-TR,DTC143TK
	89-113-187-089		TR,2SA1318TU
	87-026-608-089		C-TR,DTC 123 JK
	89-406-555-089		TR,2SD655E<G>
	87-A30-039-040		C-TR,2SD1383K<D>
DIODE			
	87-020-465-089		DIODE,1SS133
	87-020-330-089		C-DIODE,DAP202K
3CD C.B			
C101	87-010-194-089		C-CAP,S 0.047-25 F
C102	87-010-180-089		C-CAP,S 1500P-50 B
C103	87-018-134-089		CAP,TC-U 0.01-16 Y
C104	87-012-156-089		C-CAP,S 220P-50 CH
C105	87-015-698-049		CAP,E 4.7-50 7L
C106	87-010-060-049		CAP,E 100-16 7L
C107	87-010-197-089		C-CAP,S 0.01-25 B
C108	87-016-461-089		C-CAP,S 0.47-16 F
C109	87-010-197-089		C-CAP,S 0.01-25 B
C115	87-010-318-089		C-CAP,S 47P-50 CH
C116	87-010-318-089		C-CAP,S 47P-50 CH
C117	87-010-197-089		C-CAP,S 0.01-25 B
C118	87-010-260-089		CAP,E 47-25 SME
C119	87-018-134-089		CAP,TC-U 0.01-16 Y<EXCEPT G>
C120	87-018-209-080		CAP,TC-U 0.1-50 F
C121	87-018-134-089		CAP,TC-U 0.01-16 Y
C151	87-010-182-089		C-CAP,S 2200P-50 B
C152	87-010-196-089		C-CAP,S 0.1-25 F
C153	87-010-196-089		C-CAP,S 0.1-25 F
C154	87-010-196-089		C-CAP,S 0.1-25 F
C155	87-010-404-089		CAP,E 4.7-50 SME
C156	87-010-193-089		C-CAP,S 0.033-25 F
C157	87-010-197-089		C-CAP,S 0.01-25 B
C158	87-010-401-089		CAP,E 1-50 SME
C159	87-010-382-089		CAP,E 22-25 SME
C160	87-010-213-089		C-CAP,S 0.015-25 B
C161	87-018-134-089		CAP,TC-U 0.01-16 Y
C162	87-010-263-089		CAP,E 100-10 SME 5X11
C163	87-010-197-089		C-CAP,S 0.01-25 B
C164	87-010-193-089		C-CAP,S 0.033-25 F
C165	87-010-197-089		C-CAP,S 0.01-25 B
C166	87-010-193-089		C-CAP,S 0.033-25 F
C167	87-010-197-089		C-CAP,S 0.01-25 B
C169	87-010-150-089		C-CAP,S 6P-50 CH
C170	87-010-263-089		CAP,E 100-10 SME 5X11
C171	87-010-178-089		C-CAP,S 1000P-50 B
C172	87-010-198-089		C-CAP,S 0.022-25 B
C173	87-010-196-089		C-CAP,S 0.1-25 F
C174	87-010-197-089		C-CAP,S 0.01-25 B
C175	87-010-263-089		CAP,E 100-10 SME 5X11
C176	87-010-248-089		CAP,E 220-10 SME
C177	87-010-197-089		C-CAP,S 0.01-25 B
C178	87-010-260-089		CAP,E 47-25 SME
C179	87-010-196-089		C-CAP,S 0.1-25 F
C180	87-010-196-089		C-CAP,S 0.1-25 F
C201	87-010-318-089		C-CAP,S 47P-50 CH
C202	87-010-318-089		C-CAP,S 47P-50 CH
C203	87-010-321-089		C-CAP,S 82P-50 CH
C204	87-010-321-089		G-CAP,S 82P-50 CH
C205	87-010-321-089		C-CAP,S 82P-50 CH
C206	87-010-321-089		C-CAP,S 82P-50 CH
C207	87-012-153-089		C-CAP,S 120P-50 CH
C208	87-012-153-089		C-CAP,S 120P-50 CH
C209	87-012-153-089		C-CAP,S 120P-50 CH
C210	87-012-153-089		C-CAP,S 120P-50 CH
C211	87-010-405-049		CAP,E 10-50 SME
C212	87-010-405-049		CAP,E 10-50 SME
C213	87-010-186-089		C-CAP,S 4700P-50 B
C214	87-010-186-089		C-CAP,S 4700P-50 B
C231	87-010-112-089		CAP,E 100-16 11L
C232	87-010-060-049		CAP,E 100-16 7L
C301	87-010-196-089		C-CAP,S 0.1-25 F
C302	87-010-260-089		CAP,E 47-25 SME
C501	87-010-221-049		CAP,E 470-10 SME
C502	87-010-197-089		C-CAP,S 0.01-25 B
C503	87-010-263-089		CAP,E 100-10 SME 5X11
C504	87-010-196-089		C-CAP,S 0.1-25 F
C505	87-010-196-089		C-CAP,S 0.1-25 F
C506	87-010-196-089		C-CAP,S 0.1-25 F
C507	87-010-196-089		C-CAP,S 0.1-25 F
C508	87-010-221-049		CAP,E 470-10 SME
C509	87-010-196-089		C-CAP,S 0.1-25 F
C510	87-010-196-089		C-CAP,S 0.1-25 F
C511	87-010-185-089		C-CAP,S 3900P-50 B
C601	87-010-197-089		C-CAP,S 0.01-25 B
C602	87-010-381-089		CAP,E 330-16 SME
C603	87-010-196-089		C-CAP,S 0.1-25 F
C604	87-010-137-080		CAP,E,22-16 BP
C701	87-010-322-089		C-CAP,S 100P-50 CH
C702	87-010-322-089		C-CAP,S 100P-50 CH
C703	87-010-318-089		C-CAP,S 47P-50 CH
C704	87-010-178-089		C-CAP,S 1000P-50 B
C705	87-010-178-089		C-CAP,S 1000P-50 B
C712	87-010-982-049		CAP,E 33-25 GAS
C801	87-010-197-089		C-CAP,S 0.01-25 B<G>
C802	87-010-260-089		CAP,E 47-25 SME<G>
C803	87-010-194-089		C-CAP,S 0.047-25 F<G>
C804	87-010-260-089		CAP,E 47-25 SME<G>
C805	87-018-134-089		CAP,TC-U 0.01-16 Y<G>
C806	87-010-260-089		CAP,E 47-25 SME<G>
C807	87-010-405-089		CAP,E 10-50 SME<G>
C808	87-010-197-089		C-CAP,S 0.01-25 B<G>
C809	87-010-405-049		CAP,E 10-50 SME<G>
C810	87-010-313-089		C-CAP,S 18P-50 CH<G>
C811	87-010-314-089		C-CAP,S 22P-50 CH<G>
C812	87-010-313-089		C-CAP,S 18P-50 CH<G>
C813	87-010-315-089		C-CAP,S 27P-50 CH<G>

REF. NO.	PART NO.	カンリ NO.	DESCRIPTION
C814	87-010-197-089		C-CAP,S 0.01-25 B<G>
C815	87-010-260-049		CAP,E 47-25 SME<G>
C816	87-010-404-089		CAP,E 4.7-50 SME<G>
C817	87-010-221-089		CAP,E 470-10<G>
C818	87-010-196-089		C-CAP,S 0.1-25 F<G>
C819	87-010-321-089		C-CAP,S 82P-50 CH<G>
C820	87-010-178-089		C-CAP,S 1000P-50 B<G>
C821	87-010-196-089		C-CAP,S 0.1-25 F<G>
C822	87-010-197-089		C-CAP,S 0.01-25 B<G>
C901	87-010-260-089		CAP,E 47-25 SME<D>
C902	87-010-196-089		C-CAP,S 0.1-25 F<D>
CON2	84-ZG1-616-019		CONN ASSY,6P H
EMI801	87-008-474-089		F-BEAD,EMI BL02RN1<G>
EMI802	87-008-474-089		F-BEAD,EMI BL02RN1<G>
FC1	85-NFT-611-119		FF-CABLE,16P-1.0
FC4	84-ZG1-614-219		CABLE,FFC 5P-1.25
J801	87-009-502-010		JACK,PIN 1PY EARTH<G>
LED901	87-A40-123-019		LED,SLZ-8128A-01-B<D>
M601	87-045-305-019		MOTOR, RF-500TB
R177	87-022-365-089		C-RES,S 100K-1/10W F
R178	87-022-363-089		C-RES,S 68K-1/10W F
R179	87-022-363-089		C-RES,S 68K-1/10W F
R180	87-022-363-089		C-RES,S 68K-1/10W F
R181	87-022-363-089		C-RES,S 68K-1/10W F
R182	87-022-365-089		C-RES,S 100K-1/10W F
R401	87-022-186-089		C-RES,82-1/4W J
R403	87-022-186-089		C-RES,82-1/4W J
SFR151	87-024-175-089		SFR,47K DIA6 V
SFR152	87-024-176-089		SFR,100K DIA6 V
SFR153	87-024-176-089		SFR,100K DIA6 V

REF. NO.	PART NO.	カンリ NO.	DESCRIPTION
SW701	87-036-109-019		SW,PUSH SPPB 61
SW702	87-036-109-019		SW,PUSH SPPB 61
X101	87-030-402-089		VIB,XTAL 16.9344 MHZ
X801	80-JUC-602-089		VIB,XTAL 17.73MHZ<G>
X802	80-JUC-601-089		VIB,XTAL 14.31MHZ<G>
LED C.B			
LED701	87-070-200-089		LED,SLP636C-81-S-T1
LED702	87-017-350-080		LED,SEL1550CM
LED703	87-017-350-080		LED,SEL1550CM
LED704	87-070-200-089		LED,SLP636C-81-S-T1
T-T C.B			
C401	87-018-214-089		CAP TC U 0.1-50 F
M401	87-045-364-019		MOTOR,(BCH3B14)
PS401	87-026-573-019		P-SNSR,GP1S53V
MOTOR C.B			
M2	9X-262-513-210		SLED MOTOR ASSY
PIN3	91-564-722-110		CONNECTOR 6P
SW1	91-572-085-110		LEAF SW

○ チップ抵抗部品コード／CHIP RESISTOR PART CODE

チップ抵抗部品コードの成り立ち
Chip Resistor Part Coding

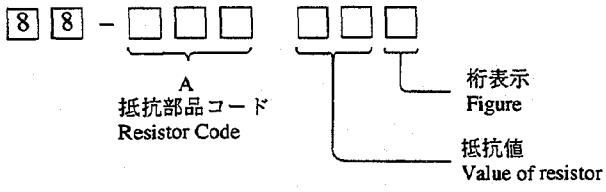

チップ抵抗
Chip resistor

容量 Wattage	種類 Type	許容誤差 Tolerance	記号 Symbol	寸法／Dimensions (mm) 外形／Form	L	W	t	抵抗コード：A Resistor Code: A
1／16W	1608	±5%	CJ	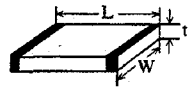	1.6	0.8	0.45	108
1／10W	2125	±5%	CJ		2	1.25	0.45	118
1／8W	3216	±5%	CJ		3.2	1.6	0.55	128

Refer to the following pages for the 4ZG-1 and the common sections.

■ IC DESCRIPTION

CXA1782BQ ..... See page 64
LC7872E ..... See page 62

■ MECHANICAL EXPLODED VIEW 1 ／ 1

See page 95

■ MECHANICAL PARTS LIST 1 ／ 1

See page 96

BLOCK DIAGRAM

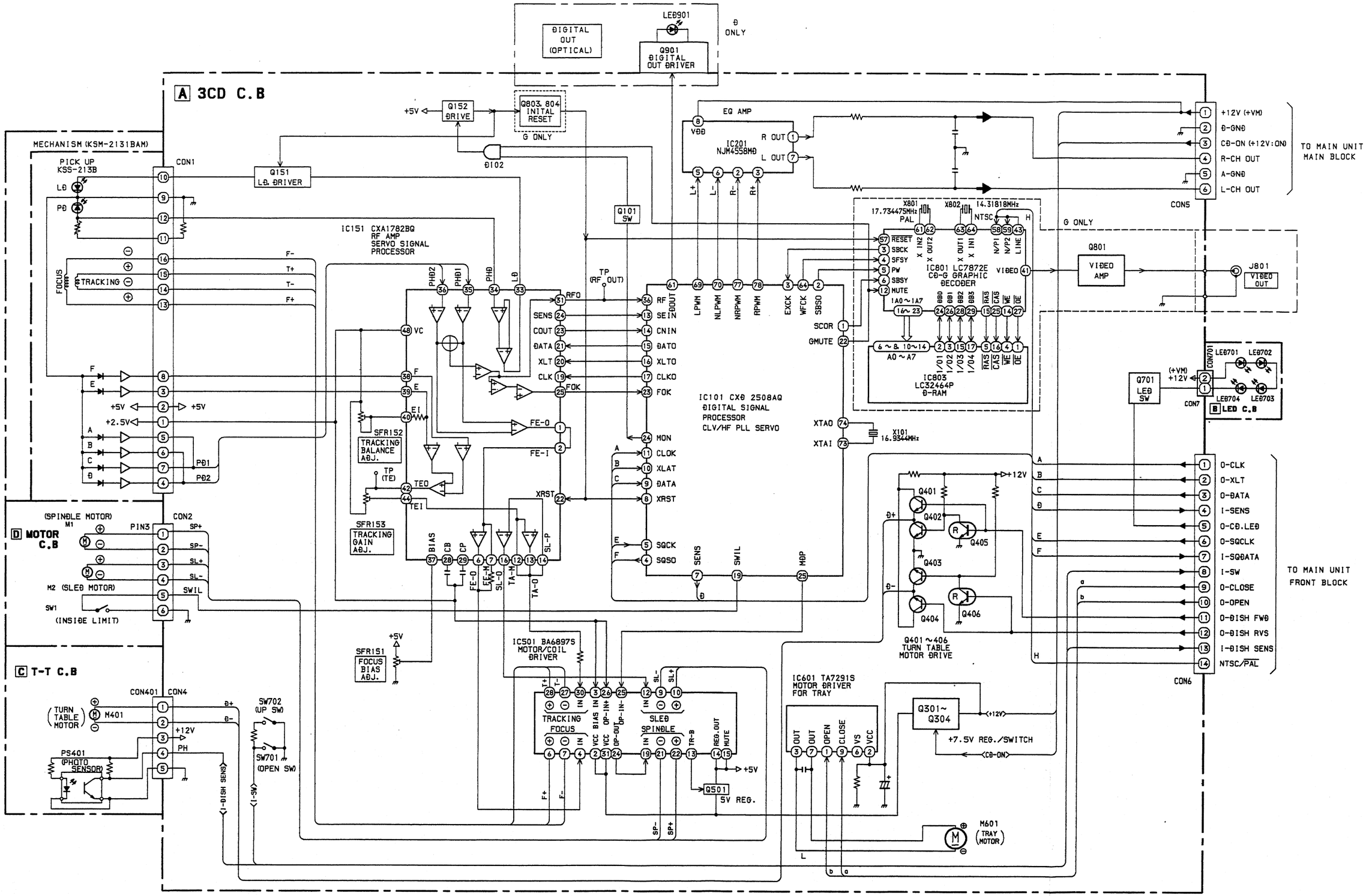

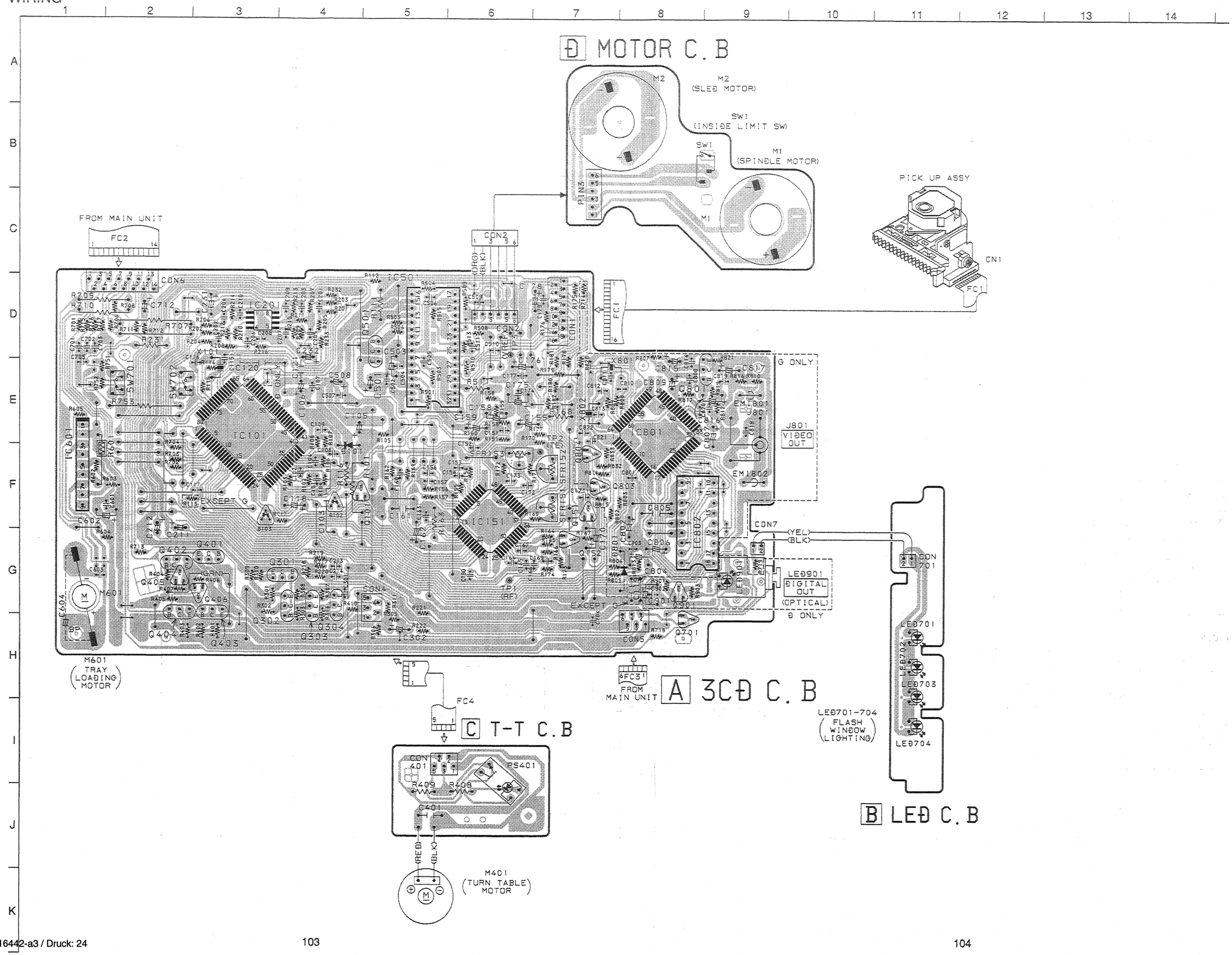
Ð MOTOR C. B
M2
(SLEÐ MOTOR)
SW1
(INSIÐE LIMIT SW)
M1
(SPINÐLE MOTOR)
PICK UP ASSY
CN1
FC1
FROM MAIN UNIT
FC2
CON2
(ORG)
(BLK)
G ONLY
J801
VIÐEO OUT
CON7
(YEL)
(BLK)
LEÐ901
ÐIGITAL OUT
(OPTICAL)
Ð ONLY
M601
(TRAY LOAÐING MOTOR)
FC3
FROM MAIN UNIT
A 3CÐ C. B
FC4
C T-T C. B
CON 401
PS401
R409
R408
C401
(REÐ)
(BLK)
M401
(TURN TABLE MOTOR)
LEÐ701-704
(FLASH WINÐOW LIGHTING)
LEÐ701
LEÐ702
LEÐ703
LEÐ704
B LEÐ C. B

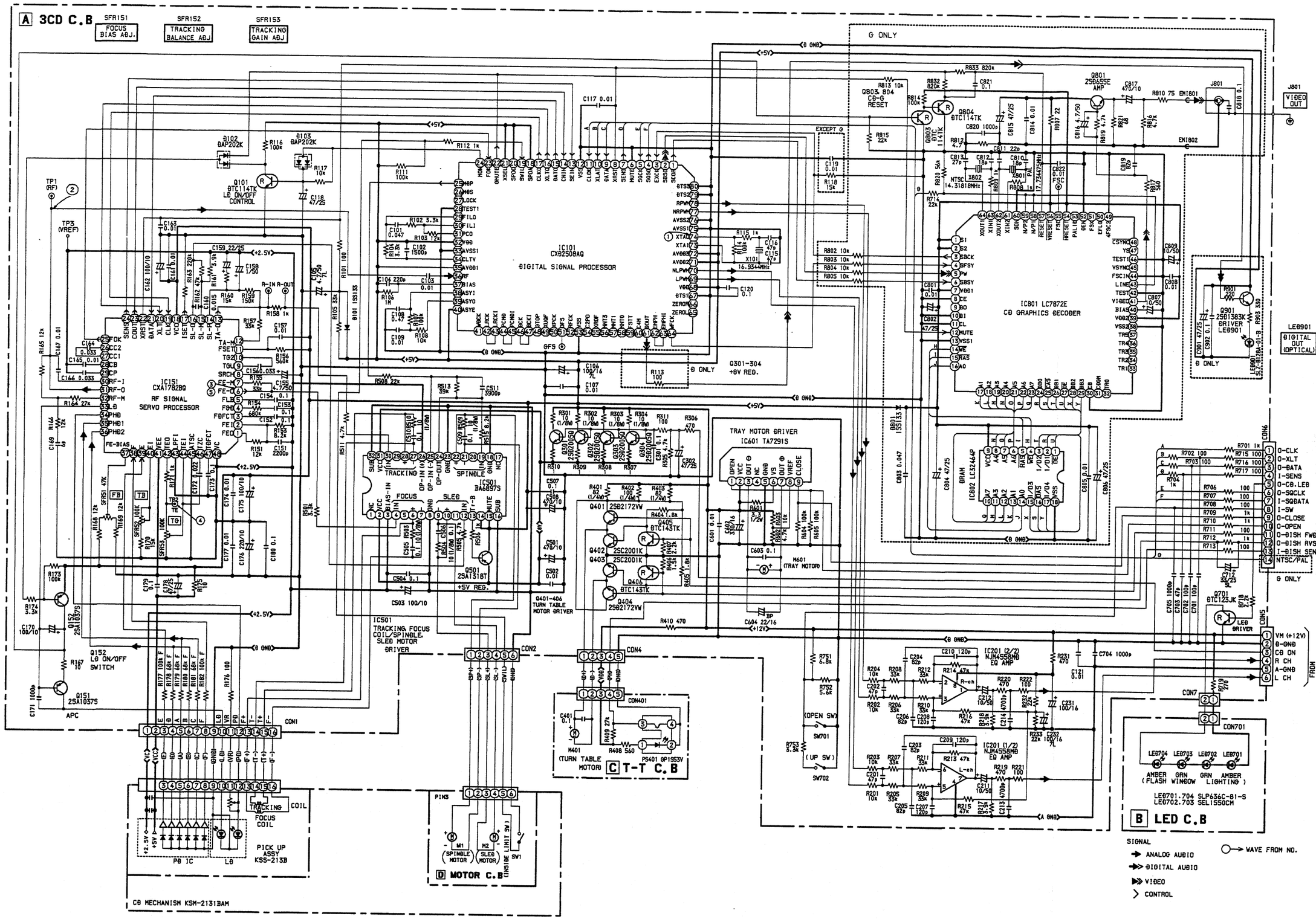
A 3CD C.B
SFR151 FOCUS BIAS ADJ.
SFR152 TRACKING BALANCE ADJ
SFR153 TRACKING GAIN ADJ
G ONLY
EXCEPT G
IC101 CX02508AQ DIGITAL SIGNAL PROCESSOR
IC151 CXA1782BQ RF SIGNAL SERVO PROCESSOR
IC801 LC7872E CD GRAPHICS DECODER
IC501 BA6897S SPINDLE TRACKING FOCUS SLED
IC601 TA7291S TRAY MOTOR DRIVER
IC201 (2/2) NJM4558MD EQ AMP
IC201 (1/2) NJM4558MD EQ AMP
IC501 TRACKING FOCUS COIL/SPINDLE SLED MOTOR DRIVER
Q101 DTC114TK LD ON/OFF CONTROL
Q102 DAP202K
Q103 DAP202K
Q152 LD ON/OFF SWITCH
Q401-406 TURN TABLE MOTOR DRIVER
Q501 2SA1318T +5V REG.
Q301-304 +8V REG.
Q701 DTC123JK LED DRIVER
Q801 2SD655E AMP
Q804 DTC114TK
Q901 2SD1383K DRIVER LED901
M401 (TURN TABLE MOTOR)
M601 (TRAY MOTOR)
PS401 GP1S53V
SW701 (UP SW)
SW702
SW1 (INSIDE LIMIT SW)
X101 16.934MHz
X801 17.734475MHz
X802 NTSC 14.31818MHz
J801 VIDEO OUT
LE8901 DIGITAL OUT (OPTICAL)
CON1
CON2
CON4
CON401
CON5
CON6
CON7
CON701
FROM MAIN UNIT.
FROM MAIN UNIT
C T-T C.B
D MOTOR C.B
B LED C.B
CD MECHANISM KSM-2131BAM
PICK UP ASSY KSS-213B
FOCUS COIL
TRACKING COIL
SIGNAL
ANALOG AUDIO
DIGITAL AUDIO
VIDEO
CONTROL
WAVE FROM NO.

WAVE FORM

① SYSTEM CLOCK
IC101 Pin ㉔ (XTAO)
f=16.9344MHz
VOLT/DIV: 2V
TIME/DIV: 0.1µS

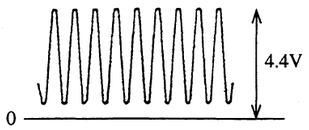

② RF
TP1 (RF)
VOLT/DIV: 500mV
TIME/DIV: 0.5µS

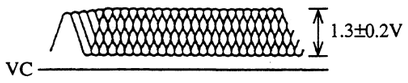

③ Focus
IC151 Pin ⑥ (FE-O)
VOLT/DIV: 200mV
TIME/DIV: 2mS

④ Tracking
TP2 (TE)
TIME/DIV: 1mS

⑤ Focus Search
IC151 Pin ⑥ (FE-O)

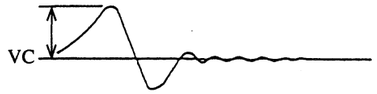

IC BLOCK DIAGRAM

IC, TA7291

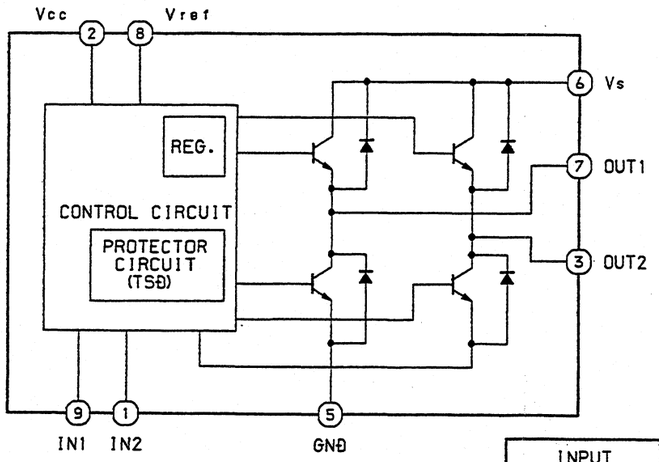

INPUT		OUTPUT		MODE
IN1	IN2	OUT1	OUT2	
0	0	∞	∞	STOP
1	0	H	L	CW
0	1	L	H	CCW
1	1	L	L	BRAKE

∞ : HI IMPEDANCE
NOTE : INPUT "H" ACTIVE

IC DESCRIPTION

IC, CXD2508AQ

Pin No.	Pin name	I/O	Description
1	SCOR	O	1H when the subcode sync S0 or S1 is detected.
2	SBSO	O	SUBP~W serial output.
3	EXCK	I	Clock input for SBSO read out.
4	SQSO	O	SUBQ 80-bit serial output.
5	SQCK	I	Clock input for SQSO read out.
6	MUTE	I	H to mute. L to cancel.
7	SENS	O	SENS signal output to CPU.
8	XRST	I	System reset. L to reset.
9	DATA	I	Serial data input from CPU .
10	XLAT	I	Latch input from CPU. Latching serial data at fall down.
11	CLOK	I	Clock input from CPU to transfer serial data.
12	VSS	—	GND.
13	SEIN	I	SENS input from SSP.
14	CNIN	I	Numbers of track jump are counted and input.
15	DATO	O	Serial data output to SSP.
16	XLTO	O	Serial data latched output to SSP. Latched at fall down edge.
17	CLKO	O	Clock input from SSP to transfer serial data.
18, 20	SPOA, C	I	Microprocessor expansion interface.
19	XTSL	I	X'tal selection input terminal. "L" at 16.9344MHz X'tal. "H" at 33.86888MHz.
22	XLON	O	Microprocessor expansion interface.
23	FOK	I	Focus OK input pin. Used for SENS output and servo auto sequencer.
24	MON	O	Spindle motor ON/OFF control output.
25	MDP	O	Spindle motor servo control output.
26	MDS	O	Spindle motor servo control output.
27	LOCK	O	GFS is sampled by 460Hz. H output when GFS is H. L output when GFS is L for 8 consecutive times.
28	TEST1	I	TEST. (Connected to GND)
29	FILO	O	Filter output to master PLL. (slave=digital PLL)
30	FILI	I	Filter input to master PLL.
31	PCO	O	Charge-pump output to master PLL.
32	VDD	—	Power supply input. (+5V)
33	AVSS1	—	GND.
34	CLTV	I	VCO control voltage input to master PLL.
35	AVDD1	—	Power supply input. (+5V)
36	RF	I	EFM signal input.
37	BIAS	I	Constant current input to asymmetry correction circuit.
38	ASYI	I	Comparate voltage input to asymmetry correction circuit.
39	ASYO	O	EFM full swing output. (L=VSS, H=VDD)
40	ASYE	I	L: asymmetry correction OFF. H: asymmetry correction ON
41	WDCK	O	D/A interface, word clock (2Fs) for 48-bit slot.
42	LRCK	O	D/A interface, LR clock (Fs) for 48-bit slot.

Pin No.	Pin name	I/O	Description
43	LRCKI	I	LR clock input to DAC. (48-bit slot)
44	PCMD	O	D/A interface, serial data. (2's complement, MSB first)
45	PCMDI	I	Audio data input to DAC. (48-bit slot)
46	BCK	O	D/A interface, bit clock.
47	BCKI	I	Bit clock input to DAC. (48-bit slot)
48	GTOP	O	GTOP output.
49	XUGF	O	XUFG output.
50	XPCK	O	XPLCK output.
51	GFS	O	GFS output.
52	RFCK	O	RFCK output.
53	VSS	—	GND.
54	C2PO	O	C2PO output.
55	XROF	O	XRAOF output.
56	MNT3	O	MNT3 output.
57	MNT1	O	MNT1 output.
58	MNT0	O	MNT0 output.
59	FSTT	O	Pins-73 and -74 divided-by 2/3 output.
60	C4M	O	4.2336MHz output.
61	DOUT	O	Digital Out connector output signal.
62	EMPH	O	H when the playback disc has emphasis. L when it does not.
63	EMPHI	I	DAC emphasis ON/OFF. H when ON. L when OFF
64	WFCK	O	WFCK (WRITE FRAME CLOCK) output.
65	ZEROL	O	No sound data detection output. H (L-ch) when no sound data is detected.
66	ZEROR	O	No sound data detection output. H (R-ch) when no sound data is detected.
67	DTSI	I	TEST for DAC. (Normally "L")
68	VDD	—	Power supply input. (+5V)
69	NLPWM	O	L-ch PWM output. (reversed polarity)
70	LPWM	O	L-ch PWM output. (normal polarity)
71	AVDD2	—	Power supply input to L-ch PWM driver. (Connected to +5V)
72	AVDD3	—	Power supply input to X'tal. (Connected to +5V)
73	XTAI	I	X'tal input to 33.8688MHz oscillator circuit.
74	XTAO	O	33.8688MHz X'tal oscillator circuit output.
75	AVSS1	—	GND input to X'tal. (Connected GND)
76	AVSS2	—	GND input to PWM driver. (Connected to GND)
77	NRPWM	O	R-ch PWM output. (reversed phase)
78	RPWM	O	R-ch PWM output. (normal phase)
79	DTS2	I	TEST-2 for DAC. (Normally "L")
80	DTS3	I	TEST-3 for DAC. (Normally "L")

TEST MODE

1. How to Activate CD Test Mode
   Insert the AC plug while pressing the function CD button.
   All FL display tubes will light up, and the test mode will be activated.

2. How to Cancel CD Test Mode
   Either one of the following operations will cancel the CD test mode.
   - Press the function button. (except CD function button)
   - Press the power switch button.
   - Disconnect the AC plug

3. CD Test Mode Functions
   When test mode is activated, the following mode functions from No.1 to No.5 can be used by pressing the operation keys.

Mode/No.	Operation	FL display	Operation	Contents
Start mode No.1	Activation	All lamps light	• Test mode is activated. • Laser diode turns always ON. (CD block power is ON.)	• FL display check (All displays light.) • APC circuit check • Laser current measurement (Laser current control. Across a resistor connected between emitter and GND.)
Search mode No.2	■ key	C1--	• Continual focus search (The pickup lens repeats the full-swing up-down motion.) * Avoid continual searches that last for more than 10 minutes. * NOTE 1	FOCUS SERVO • Check focus search waveform • Check focus error waveform (FOK/FZC are not monitored in the search mode)
Play mode No.3	◀▶ key	C11	• Normal playback • Focus search is continued if TOC cannot be read. * NOTE 1	FOCUS SERVO/TRACKING SERVO CLV SERVO/SLED SERVO Check FOK/FZC
Traverse mode No.4	▮▮ key	C11	• During normal disc playback Press once; tracking servo OFF Press twice; tracking servo ON * NOTE 2	TRACKING SERVO ON/OFF Tracking balance (traverse) adjustment
Sled mode No.5	⏮ key ⏭	All lamps light	• Pickup moves to the outermost track • Pickup moves to the innermost track * NOTE 3 (During playback, machine operates normally.)	SLED SERVO Check SLED mechanism operation

* NOTE 1: There are cases when the tracking servo cannot be locked owing to the protection circuit being operated when heat builds up in the driver IC if the focus search is operated continually for more than 10 minutes. In these cases the power supply should be switched off for 10 minutes until heat has been reduced and then re-started.
* NOTE 2: Do not press the ⏮ or ⏭ keys when the machine is in the ▮▮ status is active. If they are pressed, playback will not be possible after the ▮▮ status has been canceled. If the ⏮ or ⏭ keys are pressed in the ▮▮ status, press the ■ key and return to the start mode (No.1).
* NOTE 3: When pressing the ⏮ or ⏭ keys, take care to avoid damage to the gears. Because the sled motor is activated when the ⏮ or ⏭ keys are pressed, even when the pick-up is at the outermost or innermost track.

4. Operation Outline
   The operation of each mode is carried out in the direction of the arrows from the start mode as indicated in the following illustration.

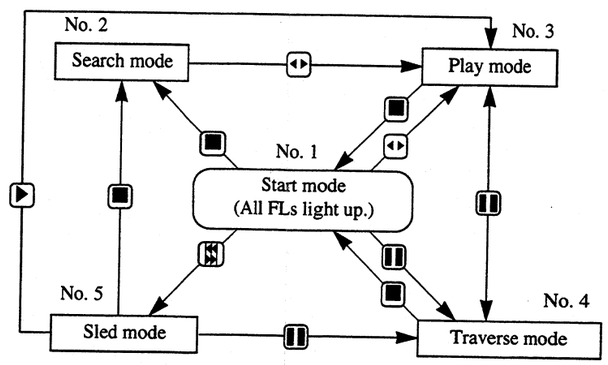

If the DISC DIRECT PLAY button is pressed, the machine performs the same operation as the PLAY button is pressed as shown. If the tray is opened by pressing OPEN/CLOSE button during Play mode or Traverse mode, the machine returns to the Start mode.

A 3CD C.B (PATTERN SIDE)

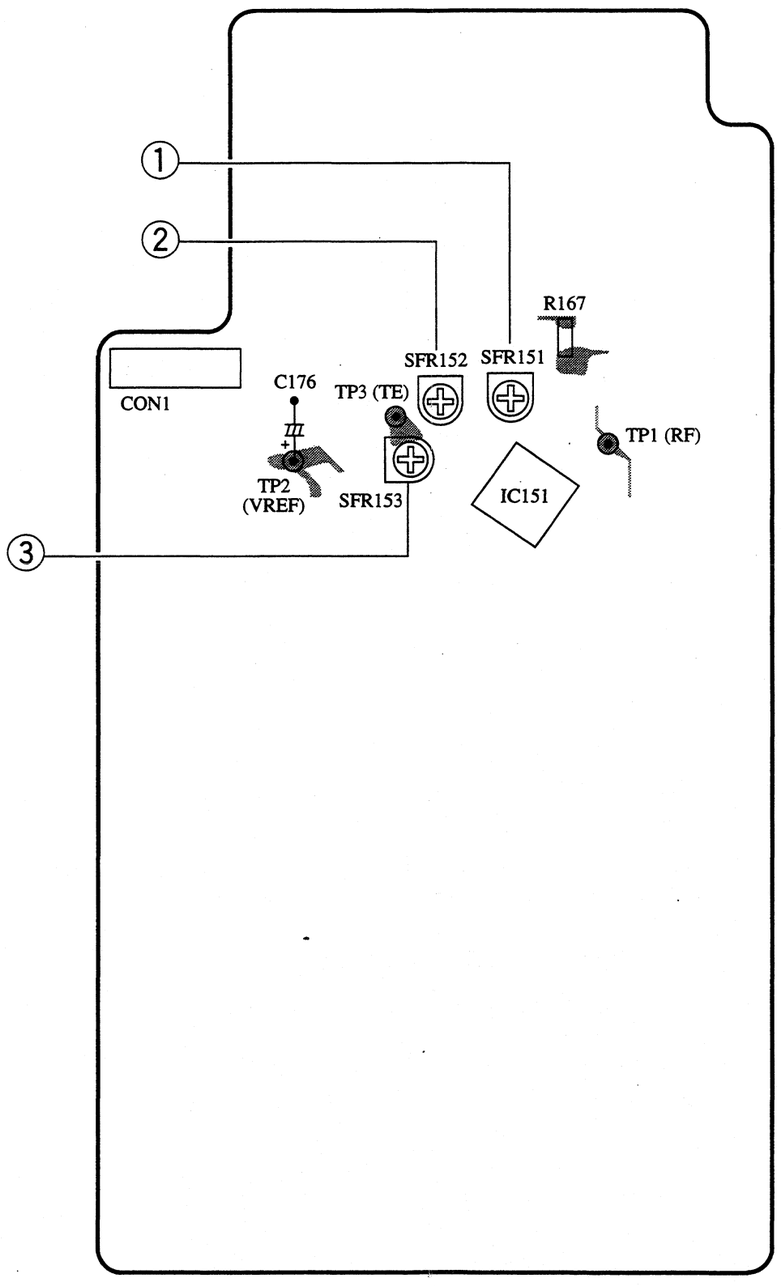

Note: • Connect a probe (10: 1) of the oscilloscope or the frequency counter to a test point.
• During adjustment, connect (⊖) pin of an oscilloscope to TP2 (VREF).

1. Focus Bias Adjustment
Make the focus bias adjustment when replacing and repairing the optical block.

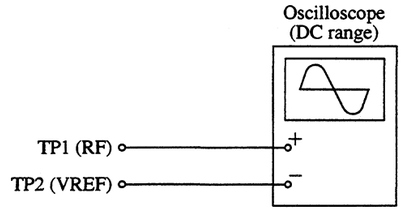

1) Connect an oscilloscope to test points TP1 (RF) and TP2 (VREF).
2) Turn on the power switch.
3) Insert test disc TCD-782 (YEDS-18) and play back the second composition.
4) Adjust SFR151 so that RF signal of test point TP1 (RF) is MAX and CLEARREST.

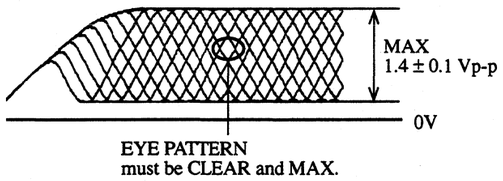

EYE PATTERN
must be CLEAR and MAX.

VOLT/DIV: 0.5 V
TIME/DIV: 0.5µS

Note: The current of the laser signal can be checked with the voltages on both sides of R167 (10Ω). The difference for the specified value shown on the lavel must be within±6.0mA.

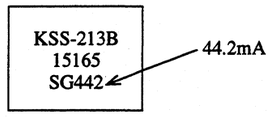

$$\text{Laser current Iop} = \frac{\text{Voltage across R167}}{10\Omega}$$

2. Tracking Balance Adjustment

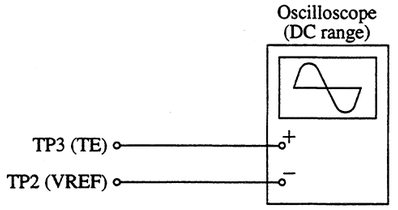

1) Connect an oscilloscope to test points TP3 (TE) and TP2 (VREF).
2) Turn on the power switch.
3) Insert test disc TCD-782 (YEDS-18) and press the PLAY button.
4) Adjust SFR153 to reduce the tracking gain.
5) Adjust SFR152 so that the traverse waveform on an oscilloscope is vertically symmetrical as shown in the figure below.

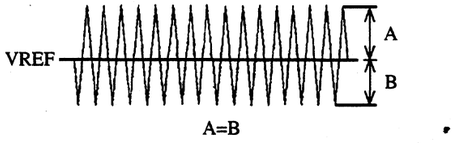

VOLT/DIV: 20mV
TIME/DIV: 1mS

3. Tracking Gain Adjustment

A servo analyzer is necessary in order to perform this adjustment exactly. However, this gain has a margin, so even if it is slightly off, there is no problem. Therfore, do not perform this adjustment.
Focus/tracking gain determines the pick-up follow-up (vertical and horizontal) relative to mechanical noise and mechanical shock when 2-axis device operates. However, as these reciprocate, the adjustment is at the point where both are satisfied.

- When gain is raised, the noise increases when the 2-axis device operates.
- When gain is lowered, it is more susceptible to mechanical shock and skipping occurs more easily.

When the gain adjustment is off, the symptoms below appear.

Symptoms \ Gain	(Focus)	Tracking
● The time until music starts becomes longer for STOP→▶PLAY or automatic selection (⏮, ⏭ buttons pressed.) (Normally takes about 2 seconds.)	low	low or high
● Music does not start and disc continues to rotate for STOP→▶PLAY or automatic selection (⏮, ⏭ buttons pressed.)	———	low
● Disc stops to rotate shortly after STOP→▶PLAY.	low or high	———
● Sound is interrupted during PLAY. Or time counter display stops.	———	low
● More noises during the 2-axis device operation.	high	high

The following is simple adjustment method.

— Simple adjustment —

Note: Since the exact adjustment cannot be performed, remember the positions of the controls before the performing the adjustment. If the positions after the simple adjustment are only a little different, return the controls to the original position.

Procedure:

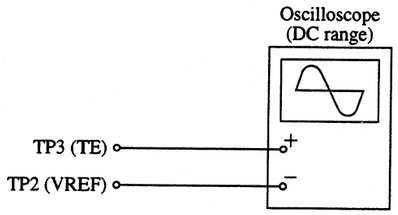

1) Keep the set horizontal. (If the set is not kept horizontally, this adjustment cannot be performed due to the gravity against the 2-axis device.)
2) Insert test disc TCD-782 (YEDS-18) and play back the second composition.
3) Connect an oscilloscope to TP3 (TE), TP2 (VREF) of the CD C.B.
4) Adjust SFR153 so that the waveform appears as shown in the figure below. (tracking gain adjustment)

VOLT/DIV: 50mV
TIME/DIV: 1mS

● Incorrect example

Low tracking gain
(The fundamental wave appears as compared with the waveform adjusted.)

VOLT/DIV: 50mV
TIME/DIV: 1mS

High tracking gain
(The frequency of the fundamental wave is higher than that in low gain.)

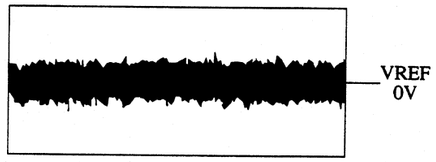

VOLT/DIV: 50mV
TIME/DIV: 1mS

CD MECHANISM EXPLODED VIEW 1 ／ 1 (KSM-2131BAM <A, B>)

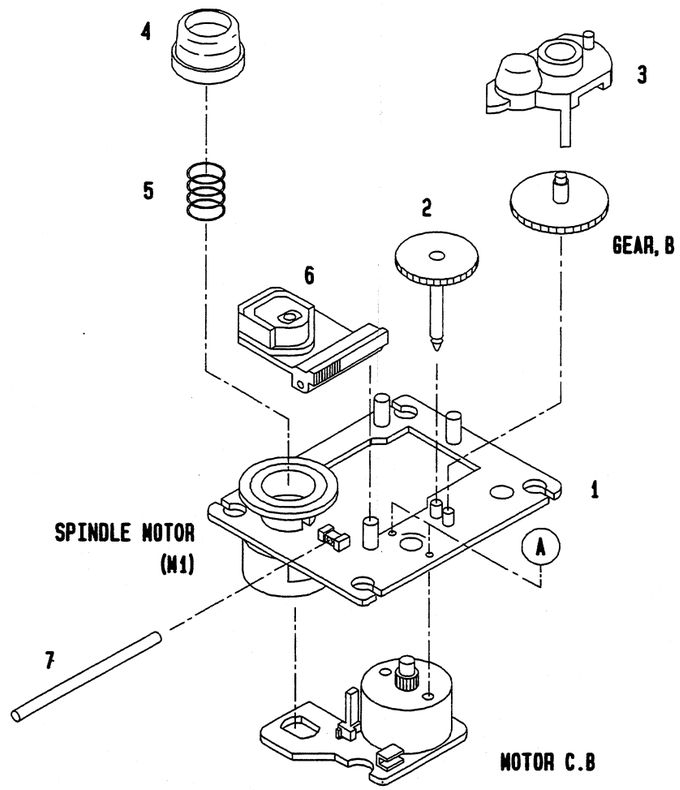

CD MECHANISM PARTS LIST 1 ／ 1 (KSM-2131BAM <A, B>)

DESCRIPTIONで判断できない物は “REFERENCE NAME LIST” を参照してください。
If can’t understand for Description please kindly refer to “REFERENCE NAME LIST”.

REF. NO	PART NO.	カンリ NO.	DESCRIPTION
1	- - -		MOTOR CHASSIS ASSY
2	92-625-188-020		GEAR(A)
3	92-625-544-010		COVER
4	92-625-186-020		RING CENTER C
5	92-625-191-010		SPRING COMPRESSION
6	87-070-445-010		OPTICAL PICK UP KSS-213B
7	94-917-565-010		SHAFT SLED
A	87-261-032-210		V+2-3

4ZG-1B

ELECTRICAL MAIN PARTS LIST

DESCRIPTION で判断できない物は “REFERENCE NAME LIST” を参照してください。
If can't understand for Description please kindly refer to “REFERENCE NAME LIST”.

REF. NO.	PART NO.	カンリ NO.	DESCRIPTION
IC			
	87-070-336-019		IC,TC 9284 BF
	87-002-407-019		IC TA8191F
	87-017-888-089		IC,NJM4558MD
	87-070-305-019		IC,BA6897S
	87-001-982-019		IC,TA7291S
	87-017-802-010		IC,LC7872E<G>
	87-017-803-010		IC,LC32464P-80<G>
TRANSISTOR			
	87-026-297-089		C-TR,DTA144TK
	89-110-373-089		C-TR,2SA1037 S
	89-420-052-089		TR 2SD2005Q (T105)
	89-421-722-389		TR,2SD2172 V/W
	89-320-011-089		TR,2SC2001K
	87-026-223-089		C-TR,DTC143TK
	89-113-187-089		TR,2SA1318TU
	87-026-608-089		C-TR,DTC 123 JK
	89-406-555-089		TR,2SD655E<G>
	87-026-239-089		C-TR,DTC114TK<G>
	89-327-125-089		C-TR,2SC2712GR<D>
DIODE			
	87-020-465-089		DIODE,1SS133
3CD C.B			
C101	87-015-819-089		CHIP CAP 0.01
C102	87-015-819-089		CHIP CAP 0.01
C103	87-015-676-089		CAP,E 47-6.3 7L
C104	87-015-676-089		CAP,E 47-6.3 7L
C106	87-010-197-089		C-CAP,S 0.01-25 B
C107	87-010-404-089		CAP,E 4.7-50 SME
C108	87-010-197-089		C-CAP,S 0.01-25 B
C109	87-010-248-049		CAP,E 220-10 SME
C110	87-010-263-049		CAP,E 100-10
C111	87-010-309-089		C-CAP,1000P-50 CH
C112	87-010-197-089		C-CAP,S 0.01-25 B
C113	87-010-184-089		C-CAP,S 3300P-50 B
C114	87-010-060-049		CAP,E 100-16 7L
C115	87-010-197-089		C-CAP,S 0.01-25 B
C116	87-010-197-089		C-CAP,S 0.01-25 B
C117	87-010-322-089		C-CAP,S 100P-50 CH
C120	87-010-314-089		C-CAP,S 22P-50 CH
C121	87-010-314-089		C-CAP,S 22P-50 CH
C123	87-010-197-089		C-CAP,S 0.01-25 B
C124	87-010-184-089		C-CAP,S 3300P-50 B
C125	87-010-805-089		C-CAP,S 1-16F
C126	87-018-134-089		CAP,TC-U 0.01-16 Y<EXCEPT G>
C127	87-010-196-089		C-CAP,S 0.1-25 F
C152	87-010-196-089		C-CAP,S 0.1-25 F
C153	87-010-154-089		C-CAP,S 10P-50 CH
C154	87-010-322-089		C-CAP,S 100P-50 CH
C155	87-010-263-089		CAP,E 100-10 SME 5X11
C156	87-010-197-089		C-CAP,S 0.01-25 B
C157	87-012-141-089		C-CAP,S 0.22-16 F
C158	87-010-545-049		CAP E 0.22-50 SME
C159	87-015-683-080		CAP,E 33-16 7L
C160	87-010-193-089		C-CAP,S 0.033-25 F
C161	87-010-197-089		C-CAP,S 0.01-25 B
C162	87-010-248-089		CAP,E 220-10 SME
C163	87-010-260-089		CAP,E 47-25 SME
C164	87-010-403-089		CAP,E 3.3-50 SME
C165	87-010-213-089		C-CAP,S 0.015-25 B
C166	87-010-187-089		C-CAP,S 5600P-50 B
C167	87-012-365-089		C-CAP,S 0.027-25V BK
C168	87-010-189-089		C-CAP,S 8200P-50 B
C169	87-015-883-089		C-CAP 0.022-25BK
C170	87-010-320-089		C-CAP,S 68P-50 CH
C171	87-010-382-089		CAP,E 22-25 SME
C172	87-010-197-089		C-CAP,S 0.01-25 B
C173	87-010-263-089		CAP,E 100-10 SME 5X11
C174	87-010-178-089		C-CAP,S 1000P-50 B
C175	87-010-805-089		C-CAP,S 1-16F
C201	87-010-318-089		C-CAP,S 47P-50 CH
C202	87-010-318-089		C-CAP,S 47P-50 CH
C203	87-010-321-089		C-CAP,S 82P-50 CH
C204	87-010-321-089		C-CAP,S 82P-50 CH
C205	87-010-321-089		C-CAP,S 82P-50 CH
C206	87-010-321-089		C-CAP,S 82P-50 CH
C207	87-012-153-089		C-CAP,S 120P-50 CH
C208	87-012-153-089		C-CAP,S 120P-50 CH
C209	87-012-153-089		C-CAP,S 120P-50 CH
C210	87-012-153-089		C-CAP,S 120P-50 CH
C211	87-010-405-049		CAP,E 10-50 SME
C212	87-010-405-049		CAP,E 10-50 SME
C213	87-010-186-089		C-CAP,S 4700P-50 B
C214	87-010-186-089		C-CAP,S 4700P-50 B
C231	87-010-112-089		CAP,E 100-16
C232	87-010-060-049		CAP,E 100-16 7L
C301	87-010-196-089		C-CAP,S 0.1-25 F
C302	87-010-260-089		CAP,E 47-25 SME
C501	87-010-221-049		CAP,E 470-10 SME
C502	87-010-197-089		C-CAP,S 0.01-25 B
C503	87-010-263-089		CAP,E 100-10 SME 5X11
C504	87-010-196-089		C-CAP,S 0.1-25 F
C505	87-010-196-089		C-CAP,S 0.1-25 F
C506	87-010-196-089		C-CAP,S 0.1-25 F
C507	87-010-196-089		C-CAP,S 0.1-25 F
C508	87-010-221-049		CAP,E 470-10 SME
C509	87-010-196-089		C-CAP,S 0.1-25 F
C510	87-010-196-089		C-CAP,S 0.1-25 F
C601	87-010-197-089		C-CAP,S 0.01-25 B
C602	87-010-381-089		CAP,E 330-16 SME
C603	87-010-196-089		C-CAP,S 0.1-25 F
C701	87-010-322-089		C-CAP,S 100P-50 CH
C702	87-010-322-089		C-CAP,S 100P-50 CH
C703	87-010-318-089		C-CAP,S 47P-50 CH
C704	87-010-178-089		C-CAP,S 1000P-50 B
C705	87-010-178-089		C-CAP,S 1000P-50 B
C712	87-010-982-049		CAP,E 33-25 GAS
C801	87-010-197-089		C-CAP,S 0.01-25 B<G>
C802	87-010-260-089		CAP,E 47-25 SME<G>
C803	87-010-194-089		C-CAP,S 0.047-25 F<G>
C804	87-010-260-089		CAP,E 47-25 SME<G>
C805	87-018-134-089		CAP,TC-U 0.01-16 Y<G>
C806	87-010-260-089		CAP,E 47-25 SME<G>
C807	87-010-405-089		CAP,E 10-50 SME<G>
C808	87-010-197-089		C-CAP,S 0.01-25 B<G>
C809	87-010-405-049		CAP,E 10-50 SME<G>
C810	87-010-313-089		C-CAP,S 18P-50 CH<G>
C811	87-010-314-089		C-CAP,S 22P-50 CH<G>
C812	87-010-313-089		C-CAP,S 18P-50 CH<G>
C813	87-010-315-089		C-CAP,S 27P-50 CH<G>
C814	87-010-197-089		C-CAP,S 0.01-25 B<G>
C815	87-010-260-049		CAP,E 47-25 SME<G>
C816	87-010-404-089		CAP,E 4.7-50 SME<G>
C817	87-010-221-089		CAP,E 470-10<G>
C818	87-010-196-089		C-CAP,S 0.1-25 F<G>
C819	87-010-321-089		C-CAP,S 82P-50 CH<G>
C820	87-010-178-089		C-CAP,S 1000P-50 B<G>
C821	87-010-196-089		C-CAP,S 0.1-25 F<G>
C822	87-010-403-089		CAP,E 3.3-50 SME<G>
C824	87-018-134-089		CAP,TC-U 0.01-16 Y
C901	87-010-260-089		CAP,E 47-25 SME<D>
C902	87-010-196-089		C-CAP,S 0.1-25 F<D>
CON2	84-ZG1-616-019		CONN ASSY,6P H
EMI801	87-008-474-089		F-BEAD,EMI BL02RN1<G>
EMI802	87-008-474-089		F-BEAD,EMI BL02RN1<G>
FC1	85-NFT-611-119		FF-CABLE,16P-1.0
FC4	84-ZG1-614-219		CABLE,FFC 5P-1.25
J801	87-009-502-010		JACK,PIN 1PY EARTH<G>
LED901	87-A40-123-019		LED,SLZ-8128A-01-B<D>
M601	87-045-305-019		MOTOR, RF-500TB
R184	87-022-361-089		C-RES,S 47K-1/10W F
R185	87-022-361-089		C-RES,S 47K-1/10W F
R186	87-022-361-089		C-RES,S 47K-1/10W F
R187	87-022-361-089		C-RES,S 47K-1/10W F
R188	87-022-361-089		C-RES,S 47K-1/10W F
R189	87-022-361-089		C-RES,S 47K-1/10W F
R401	87-022-186-089		C-RES,82-1/4W J
R403	87-022-186-089		C-RES,82-1/4W J
SFR151	87-024-176-089		SFR,100K DIA6 V
SFR152	87-024-171-089		SFR 4.7K DIA6 V
SW701	87-036-109-019		SW,PUSH SPPB 61
SW702	87-036-109-019		SW,PUSH SPPB 61
X101	87-030-402-089		VIB,XTAL 16.9344 MHZ
X801	80-JUC-602-089		VIB,XTAL 17.73MHZ<G>
X802	80-JUC-601-089		VIB,XTAL 14.31MHZ<G>
LED C.B			
LED701	87-070-200-089		LED,SLP636C-81-S-T1
LED702	87-017-350-080		LED,SEL1550CM
LED703	87-017-350-080		LED,SEL1550CM
LED704	87-070-200-089		LED,SLP636C-81-S-T1
T-T C.B			
C401	87-018-214-089		CAP TC U 0.1-50 F
M401	87-045-364-019		MOTOR,(BCH3B14)
PS401	87-026-573-019		P-SNSR,GP1S53V
MOTOR C.B			
M2	9X-262-513-210		SLED MOTOR ASSY
PIN3	91-564-722-110		CONNECTOR 6P
SW1	91-572-085-110		LEAF SW

○ チップ抵抗部品コード／CHIP RESISTOR PART CODE

チップ抵抗部品コードの成り立ち
Chip Resistor Part Coding

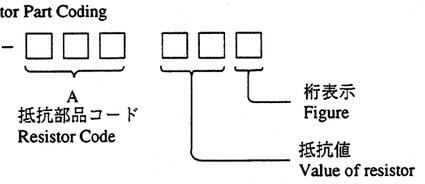

チップ抵抗
Chip resistor

容量 Wattage	種類 Type	許容誤差 Tolerance	記号 Symbol	寸法／Dimensions (mm) 外形／Form	L	W	t	抵抗コード：A Resistor Code: A
1／16W	1608	±5%	CJ	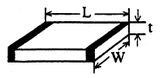	1.6	0.8	0.45	108
1／10W	2125	±5%	CJ		2	1.25	0.45	118
1／8W	3216	±5%	CJ		3.2	1.6	0.55	128

Refer to the following pages for the 4ZG-1 and the common sections.

■ IC DESCRIPTION

LC7872E ..... See page 62

■ MECHANICAL EXPLODED VIEW 1 ／ 1

See page 95

■ MECHANICAL PARTS LIST 1 ／ 1

See page 96

■ CD MECHANISM EXPLODED VIEW 1 ／ 1

See page 114

■ CD MECHANISM PARTS LIST 1 ／ 1

See page 114

BLOCK DIAGRAM

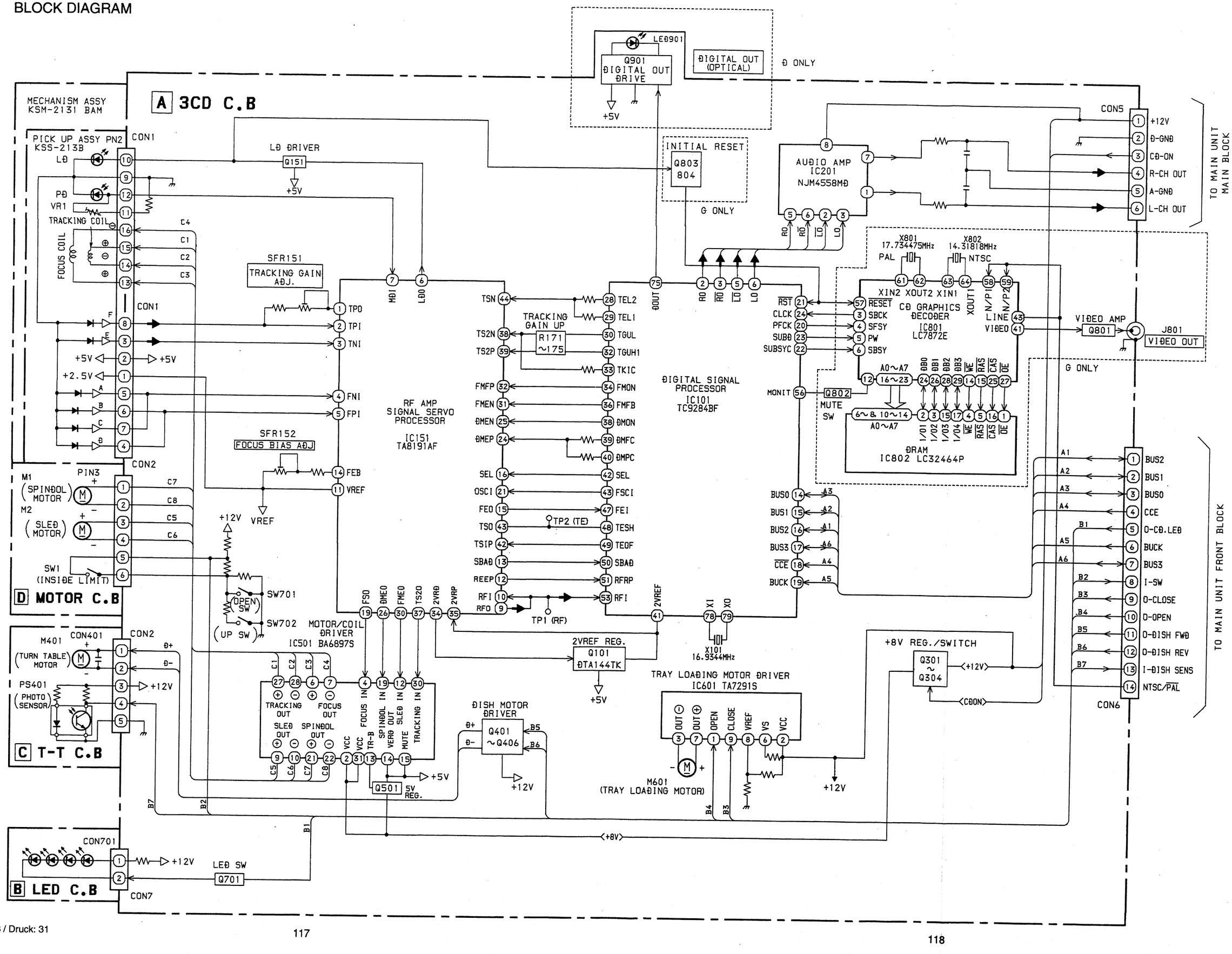

Ð MOTOR C.B

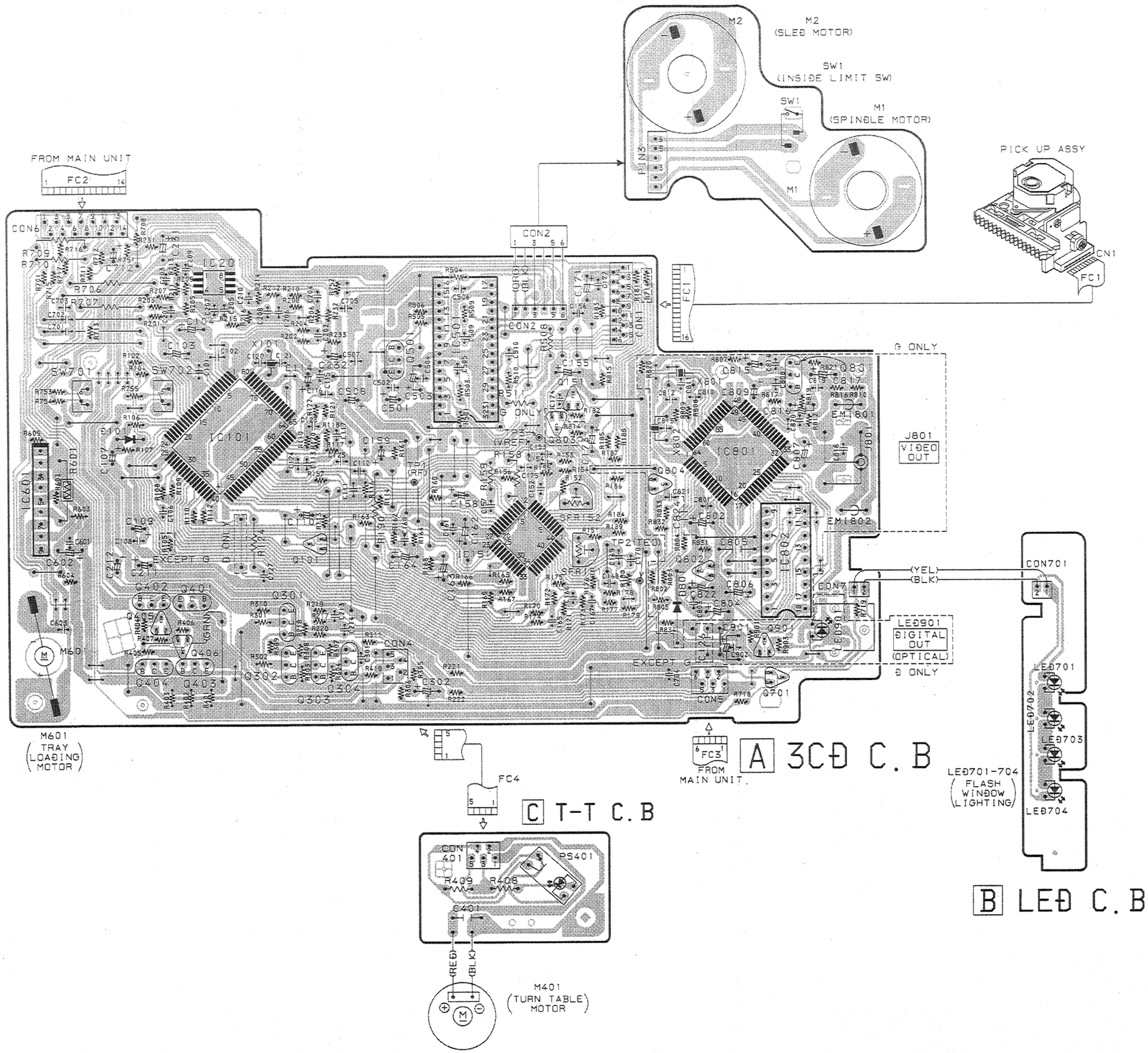
M2
(SLEÐ MOTOR)
SW1
(INSIÐE LIMIT SW)
M1
(SPINÐLE MOTOR)
PICK UP ASSY
CN1
FC1
FROM MAIN UNIT
FC2
CON2
G ONLY
J801
VIÐEO OUT
EXCEPT G
Ð ONLY
CON701
(YEL)
(BLK)
LEÐ901
ÐIGITAL OUT (OPTICAL)
LEÐ701
LEÐ702
LEÐ703
LEÐ704
LEÐ701-704
(FLASH WINÐOW LIGHTING)
M601
(TRAY LOAÐING MOTOR)
FC4
FC3
FROM MAIN UNIT.
A 3CÐ C.B
C T-T C.B
CON 401
PS401
R409
R408
C401
(RED)
(BLK)
M401
(TURN TABLE MOTOR)
B LEÐ C.B

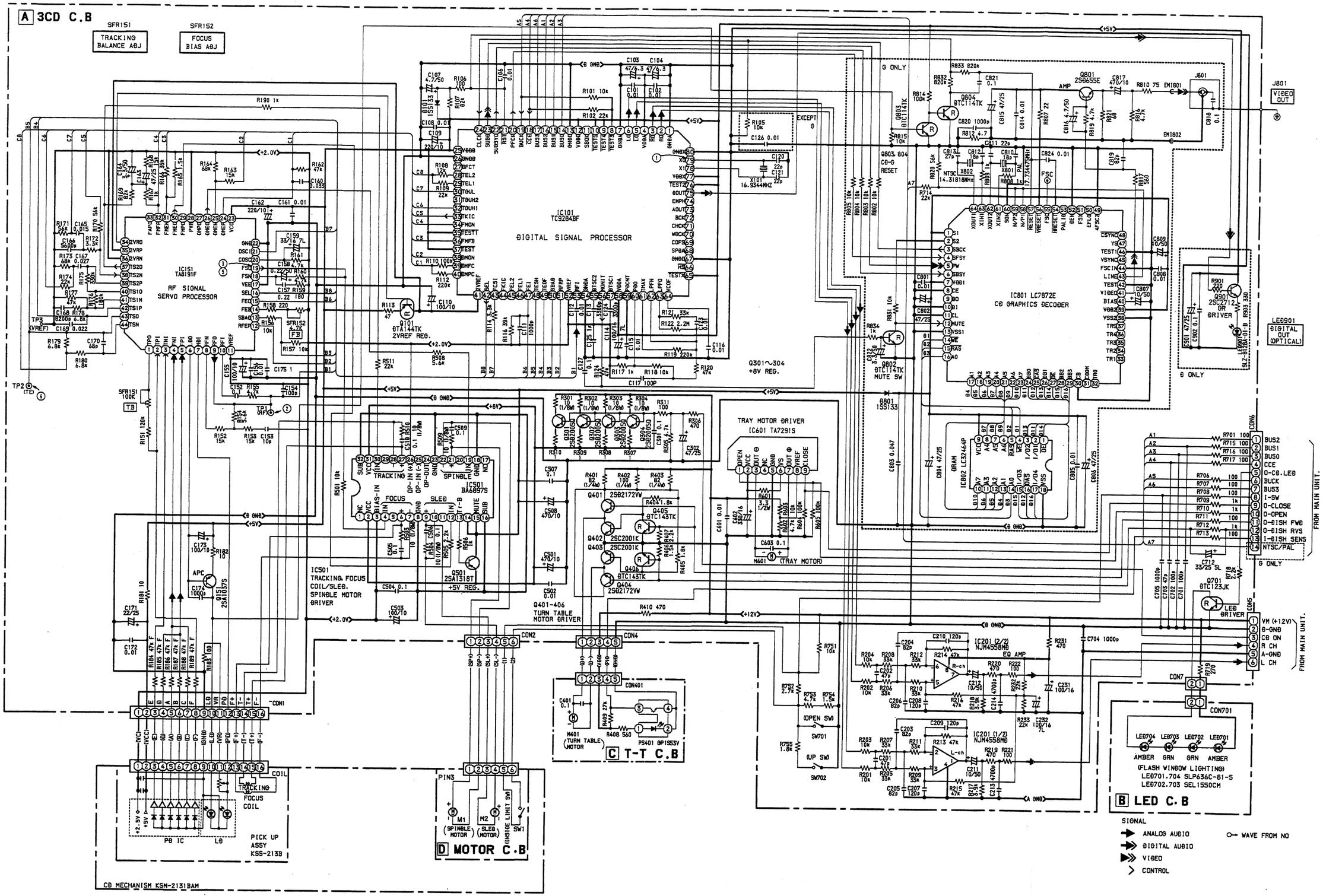
A 3CD C.B
SFR151
TRACKING BALANCE ADJ
SFR152
FOCUS BIAS ADJ
IC101 TC9284BF
DIGITAL SIGNAL PROCESSOR
IC151 TA8191F
RF SIGNAL SERVO PROCESSOR
IC801 LC7872E
CD GRAPHICS DECODER
IC501 TRACKING FOCUS COIL/SLED. SPINDLE MOTOR DRIVER
Q401~406 TURN TABLE MOTOR DRIVER
TRAY MOTOR DRIVER IC601 TA7291S
Q301~304 +8V REG.
Q101 DTA144TK 2VREF REG.
Q501 2SA1318T +5V REG.
Q801 2SB655E AMP
Q802 DTC114TK MUTE SW
Q803, 804 CD-G RESET
Q804 DTC114TK
Q901 2SC2712 GR DRIVER
Q701 DTC123JK LED DRIVER
G ONLY
EXCEPT G
B ONLY
J801 VIDEO OUT
LE0901 DIGITAL OUT (OPTICAL)
X101 16.9344MHZ
X801 17.7344758MHz
X802 14.31818MHz
NTSC
PAL
FSC
CON1
CON2
CON4
CON401
CON5
CON6
CON7
CON701
C T-T C.B
D MOTOR C.B
B LED C.B
PICK UP ASSY KSS-213B
CD MECHANISM KSM-213BAM
PD IC
LD
COIL
TRACKING
FOCUS
M401 (TURN TABLE MOTOR)
M601 (TRAY MOTOR)
M1 (SPINDLE MOTOR)
M2 (SLED MOTOR)
SW1 (INNSIDE LIMIT SW)
SW701 (OPEN SW)
SW702 (UP SW)
PS401 GP1S53V
LED701 LED702 LED703 LED704
AMBER GRN GRN AMBER
(FLASH WINDOW LIGHTING)
LE0701.704 SLP636C-81-S
LE0702.703 SEL1550CM
IC201 (1/2) NJM4558MB EQ AMP
IC201 (2/2) NJM4558MB EQ AMP
IC802 LC324464P DRAM
FROM MAIN UNIT.
TO MAIN UNIT.
SIGNAL
ANALOG AUDIO
DIGITAL AUDIO
VIDEO
CONTROL
WAVE FROM NO

WAVE FORM

① SYSTEM CLOCK
IC101 Pin ⑲ (XO)
f=16.9344MHz
VOLT/DIV: 2V
TIME/DIV: 0.1µS

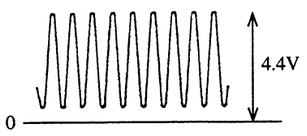

② RF
TP1 (RF)
VOLT/DIV: 500mV
TIME/DIV: 0.5µS

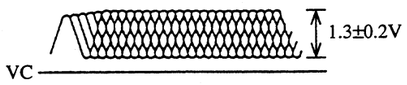

③ Focus
IC151 Pin ⑲ (FSO)
VOLT/DIV: 200mV
TIME/DIV: 2mS

④ Tracking
TP2 (TE)
TIME/DIV: 1mS

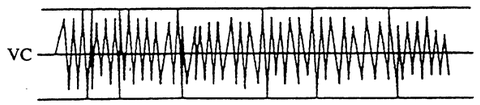

⑤ Focus Search
IC151 Pin ⑲ (FSO)

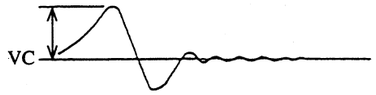

IC BLOCK DIAGRAM

IC, TA7291

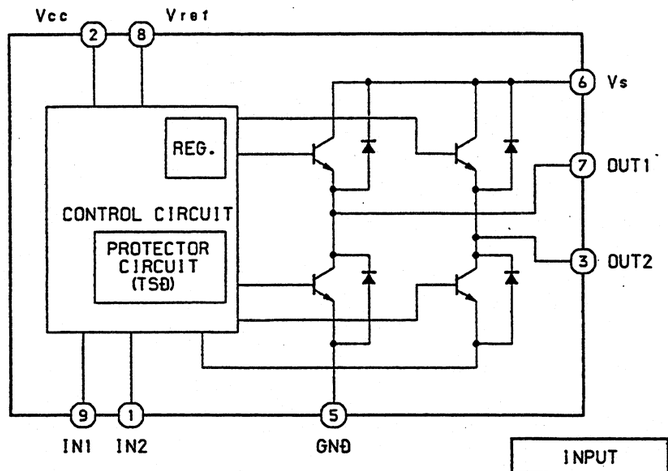

INPUT		OUTPUT		MODE
IN1	IN2	OUT1	OUT2	
0	0	∞	∞	STOP
1	0	H	L	CW
0	1	L	H	CCW
1	1	L	L	BRAKE

∞ : HI IMPEDANCE
NOTE : INPUT "H" ACTIVE

IC DESCRIPTION

IC, TC9284BF

Pin No.	Pin name	I/O	Description
1	GNDA	—	D/A converter R-channel analog GND.
2	RO	O	R-channel data positive output.
3	$\overline{RO}$	O	R-channel data inverted output.
4	VDA	—	D/A converter power supply.
5	$\overline{LO}$	O	L-channel data inverted output.
6	LO	O	L-channel data positive output.
7	GNDA	—	D/A converter L-channel analog GND.
8~10	$\overline{TEST3}$~$\overline{TEST5}$	I	TEST pin. Normally "H" or open.
11	SBOK	O	Sub code Q data CRCC judgment result output. Judgment result OK: H
12	VDDD	—	Digital power supply. (+5 V)
13	GNDD	—	Digital GND.
14~17	BUS0~BUS3	I/O	µprocessor interface, data input/output.
18	CCE	I	µprocessor interface, chip enable signal input. When "L" : BUS 3~0 are active
19	BUCK	I	µprocessor interface, clock input.
20	PFCK	O	PB frame sync output.
21	$\overline{RST}$	I	Reset signal input. "L" at reset.
22	SUBSYC	O	Sub code block sync output. When sub code is detected,"H" at S1 position.
23	SUBD	O	Sub code P~W output.
24	CLCK	I	Sub code P~W data read clock input.
25	VDDD	—	Digital power supply. (+5 V)
26	GNDD	—	Digital GND.
27	DFCT	O	Defect detection signal output. When defect is detected: "VREF", normally "HiZ".
28	TEL2	O	Tracking gain adjustment analog switch output. "VREF" , or "HiZ".
29	TEL1	O	Tracking gain adjustment analog switch output. "VREF" , or "HiZ".
30	TGUL	O	Analog switch output for tracking servo gain up. Polarity in gain-up mode and normal mode can be selected by command.
31	TGUH2	O	Analog switch output for tracking servo gain up. "HiZ" for gain-up, normally "VREF".
32	TUGH1	O	TGUH1 during normal playback. TGUH2: not used
33	TKIC	O	Tracking actuator kick signal output. NKICx and CKICx are used for kick during tracking gain adjustment. "VREF" for outermost track."O" for moving toward inner track. Normally "HiZ".
34	FMON	O	Analog switch output to turn ON/OFF the feed servo. "HiZ" to turn ON servo. "VREF" to turn OFF servo.
35	$\overline{TEST1}$	I	TEST pin. Normally "H" or open.
36	FMFB	O	Feed motor FWD/BWD direction control signal output."2VREF" for outmost track. "O" for moving toward inner track. Normally "HiZ".
37	$\overline{TEST}$	I	TEST pin. Normally "H" or open.
38	DMON	O	Analog switch output to select gain of the disc motor drive circuit. "HiZ" for CLV servo OFF, "HiZ" or "VREF" can be selected by command.

<table>
<tr><th>Pin No.</th><th>Pin name</th><th>I/O</th><th>Description</th></tr>
<tr><td>39</td><td>DMPC</td><td>O</td><td>Disc motor CLV servo AFC signal output.
<table>
<tr><th>Operation</th><th>Command</th><th>DMFC output</th></tr>
<tr><td>Motor acceleration</td><td>DMFK</td><td>“2VREF”</td></tr>
<tr><td>CLV servo ON</td><td>DMSV</td><td>AFC signal (PWM)</td></tr>
<tr><td>Motor brake</td><td>DMBK</td><td>“L”</td></tr>
<tr><td>CLV servo OFF</td><td>DMOFF</td><td>“VREF”</td></tr>
</table></td></tr>
<tr><td>40</td><td>DMPC</td><td>O</td><td>Disc motor CLV servo APC signal output.</td></tr>
<tr><td>41</td><td>2VREF</td><td>—</td><td>Analog power supply. (twice the “VREF” voltage)</td></tr>
<tr><td>42</td><td>SEL</td><td>O</td><td>Servo mode select output. It turns ON/OFF the laser diode (LD) and focus servo.
<table>
<tr><th>SEL output</th><th>LD</th><th>Focus servo</th><th>Operating mode</th></tr>
<tr><td>“L”</td><td>OFF</td><td>OFF</td><td>LD OFF</td></tr>
<tr><td>“HiZ”</td><td>ON</td><td>OFF</td><td>Focus search</td></tr>
<tr><td>“H”</td><td>ON</td><td>ON</td><td>Focus ON (normal play)</td></tr>
</table></td></tr>
<tr><td>43</td><td>FCSI</td><td>O</td><td>Focus actuator drive signal output during focus search mode. “VDDA” to move the lens far from disc. “L” to move the lens closer to disc. Normally “HiZ”.</td></tr>
<tr><td>44</td><td>FKIC</td><td>O</td><td>Focus actuator drive signal output during focus adjustment mode.ÅgVDDAÅhto move the lens far from disc. “L” to move the lens closer to disc. Normally “HiZ”.</td></tr>
<tr><td>45, 46</td><td>FEL1, FEL2</td><td>O</td><td>Focus gain adjustment analog switch output. “VREF” or “HiZ”.</td></tr>
<tr><td>47</td><td>FEI</td><td>I</td><td>Focus error signal input.</td></tr>
<tr><td>48</td><td>TESH</td><td>I</td><td>Analog switch input to track error signal sample-and-hold.</td></tr>
<tr><td>49</td><td>TEOF</td><td>O</td><td>Focus gain adjustment analog switch output.“VREF” when tracking servo off.</td></tr>
<tr><td>50</td><td>SBAD</td><td>I</td><td>Sub beam added signal input.</td></tr>
<tr><td>51</td><td>RFRP</td><td>I</td><td>RF ripple signal input.</td></tr>
<tr><td>52</td><td>VREF</td><td>—</td><td>Analog power supply.</td></tr>
<tr><td>53</td><td>RFI</td><td>I</td><td>RF signal input.</td></tr>
<tr><td>54</td><td>GNDA</td><td>—</td><td>Analog GND.</td></tr>
<tr><td>55</td><td>DTSC2</td><td>O</td><td>Data slice control EFM signal inverted output.</td></tr>
<tr><td>56</td><td>MONI T</td><td>O</td><td>Internal signal monitored output. EFMO, PLCK or LOCK signals can be selected by command. Can be muted. (Not used)</td></tr>
<tr><td>57</td><td>DTSC 1</td><td>O</td><td>Data slice control EFM signal positive polarity output.</td></tr>
<tr><td>58</td><td>VDDA</td><td>—</td><td>Analog power supply.</td></tr>
<tr><td>59</td><td>PDCNT</td><td>I</td><td>PDO output control signal input. “L” to fix to “HiZ” forcibly. “H” : normal output.</td></tr>
<tr><td>60</td><td>PDO</td><td>O</td><td>Phase error signal between EFM and PLCK signals is output.</td></tr>
<tr><td>61</td><td>TMAX</td><td>O</td><td>TMAX detected result output.
<table>
<tr><th>TMAX detected result</th><th>TMAX output</th></tr>
<tr><td>Longer than specified cycle</td><td>“L”</td></tr>
<tr><td>Shorter than specified cycle</td><td>“VREF”</td></tr>
<tr><td>Within specified cycle</td><td>“HiZ”</td></tr>
</table></td></tr>
<tr><td>62</td><td>LPFN</td><td>I</td><td>Low-pass filter amplifier inverted input.</td></tr>
</table>

Pin No.	Pin name	I/O	Description
63	LPFO	O	Low-pass filter amplifier output.
64	VCOF	O	VCO filter output.
65	TESTX	I	TEST pin. Normally “H” or “L” .(Connected to +5 V)
66	$\overline{HS}$	O	Double speed mode output. “H” : normal speed. “L” : double speed
67	GNDD	—	Digital GND.
68	SPDA	O	Processor status signal output.
69	COFS	O	Correction circuit frame clock (7.35 kHz) output.
70	WDCK	O	Word clock (88.2 kHz) output. SUBQ, BUF0V or 1PF can be selected by the µprocessor command. (Not used)
71	CHCK	O	Channel clock (44.1 kHz) output. “L”for L-channel. “H” for R-channel.
72	BCK	O	Bit clock (1.4112 MHz) output.
73	AOUT	O	Audio data output. (Not used)
74	EMPH	O	Emphasis ON/OFF select signal. “H” : emphasis ON. “L” for emphasis OFF
75	DOUT	O	DIGITAL SIGNAL output.
76	$\overline{TEST2}$	I	TEST pin. Normally “H”.
77	VDDX	—	Crystal oscillator circuit power supply.
78	XI	I	External crystal oscillator is connected. (Crystal oscillator frequency 16.9344 MHz)
79	XO	O	External crystal oscillator is connected. (Crystal oscillator frequency 16.9344 MHz)
80	GNDX	—	Crystal oscillator GND.

IC, TA8191F

Pin No.	Pin Name	I/O	Description
1	TPO	O	Sub beam I-V amplifier (TA Amp) output terminal.
2	TPI	I	Sub beam I-V amplifier (TA Amp) input terminal.
3	TNI	I	Sub beam I-V amplifier (TA Amp) input terminal.
4	FNI	I	Main beam I-V amplifier (FN Amp) input terminal.
5	FPI	I	Main beam I-V amplifier (FP Amp) input terminal.
6	LDO	O	Laser diode amplifier (LD Amp) output terminal.
7	MDI	I	Monitor photo diode amplifier (MD Amp) input terminal.
8	RFN	I	RF amplifier reversed phase input terminal.
9	RFO	O	RF amplifier output terminal.
10	RFI	I	RF ripple signal generator circuit input terminal.
11	VREF	O	Reference voltage output terminal (+2.1 V).
12	RFRP	O	RF ripple signal output terminal.
13	SBAD	O	Scar detection signal output terminal.
14	FEB	I	Focus error balance adjustment input terminal.
15	FEO	O	Focus error amplifier (FE Amp) output terminal.
16	SEL	I	Analog switch control signal input terminal.
17	VEE	—	Power supply terminal. (TA8190F; -5 V, TA8191F; GND)
18	FSN	I	Focus output amplifier (FS Amp) reversed phase input terminal.
19	FSO	O	Focus output amplifier (FS Amp) output terminal.
20	COSC	O	External capacitor to generate focus search signal is connected to this terminal.
21	OSCI	I	External input to control the built-in power supply to generate focus search signal is connected to this terminal.
22	GND	—	GND.
23	VCC	I	Power supply terminal (+5 V).
24	DMEP	I	Disc motor amplifier (DM Amp) positive phase input terminal.
25	DMEN	I	Disc motor amplifier (DM Amp) reversed phase input terminal.
26	DMEO	O	Disc motor amplifier (DM Amp) output terminal.
27	DMPO	O	Disc motor drive amplifier (DMP Amp) output terminal. (Not used).
28	PVR	I	Drive amplifier reference voltage input terminal.
29	FMPO	O	Feed motor drive amplifier (FMP Amp) output terminal. (Not used).
30	FMEO	O	Feed motor amplifier (FM Amp) output terminal.
31	FMEN	I	Feed motor amplifier (FM Amp) reversed phase input terminal.
32	FMEP	O	Feed motor amplifier (FM Amp) positive phase input terminal.
33	FAPO	O	Focus actuator drive amplifier (FAP Amp) output terminal. (Not used).
34	2VRO	I	2 V REF amplifier (2 V REF Amp) output terminal.
35	2VRP	I	2 V REF amplifier (2 V REF Amp) positive phase input terminal.
36	2VRN	I	2 V REF amplifier (2 V REF Amp) reversed phase input terminal.
37	TS2O	O	Tracking servo amplifier 2 (TS2 Amp) output terminal.
38	TS2N	I	Tracking servo amplifier 2 (TS2 Amp) reversed phase input terminal.
39	TS2P	I	Tracking servo amplifier 2 (TS2 Amp) positive phase input terminal.
40	TS1O	O	Tracking servo amplifier 1 (TS1 Amp) output terminal.

Pin No.	Pin Name	I/O	Description
41	TS1N	I	Tracking servo amplifier 1 (TS1 Amp) reversed phase input terminal.
42	TS1P	I	Tracking servo amplifier 1 (TS1 Amp) positive phase input terminal.
43	TSO	O	Tracking output amplifier (TS Amp) output terminal.
44	TSN	I	Tracking output amplifier (TS Amp) reversed phase input terminal.

TEST MODE

1. How to Activate CD Test Mode
   Insert the AC plug while pressing the function CD button.
   All FL display tubes will light up, and the test mode will be activated.

2. How to Cancel CD Test Mode
   Either one of the following operations will cancel the CD test mode.
   - Press the function button. (except CD function button)
   - Press the power switch button.
   - Disconnect the AC plug

3. CD Test Mode Functions
   When test mode is activated, the following mode functions from No.1 to No.5 can be used by pressing the operation keys.

Mode/No.	Operation	FL display	Operation	Contents
Start mode No.1	Activation	All lamps light	• Test mode is activated.	• FL display check (All displays light.)
Search mode No.2	■ key	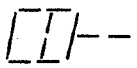	• Laser diode turns always ON. (CD block power is ON.) • Continual focus search (The pickup lens repeats the full-swing up-down motion.) * Avoid continual searches that last for more than 10 minutes. * NOTE 1	• APC circuit check • Laser current measurement (Laser current control. Across a resistor connected between emitter and GND.) FOCUS SERVO • Check focus search waveform • Check focus error waveform (FOK/FZC are not monitored in the search mode)
Play mode No.3	◀▶ key	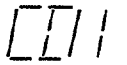	• Normal playback • Focus search is continued if TOC cannot be read. * NOTE 1	FOCUS SERVO/TRACKING SERVO CLV SERVO/SLED SERVO Check FOK/FZC
Traverse mode No.4	▮▮ key	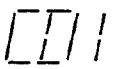	• During normal disc playback Press once; tracking servo OFF Press twice; tracking servo ON * NOTE 2	TRACKING SERVO ON/OFF Tracking balance (traverse) adjustment
Sled mode No.5	⏮ key ⏭	All lamps light	• Pickup moves to the outermost track • Pickup moves to the innermost track * NOTE 3 (During playback, machine operates normally.)	SLED SERVO Check SLED mechanism operation

* NOTE 1: There are cases when the tracking servo cannot be locked owing to the protection circuit being operated when heat builds up in the driver IC if the focus search is operated continually for more than 10 minutes. In these cases the power supply should be switched off for 10 minutes until heat has been reduced and then re-started.
* NOTE 2: Do not press the ⏮ or ⏭ keys when the machine is in the ▮▮ status is active. If they are pressed, playback will not be possible after the ▮▮ status has been canceled. If the ⏮ or ⏭ keys are pressed in the ▮▮ status, press the ■ key and return to the start mode (No.1).
* NOTE 3: When pressing the ⏮ or ⏭ keys, take care to avoid damage to the gears. Because the sled motor is activated when the ⏮ or ⏭ keys are pressed, even when the pick-up is at the outermost or innermost track.

4. Operation Outline
   The operation of each mode is carried out in the direction of the arrows from the start mode as indicated in the following illustration.

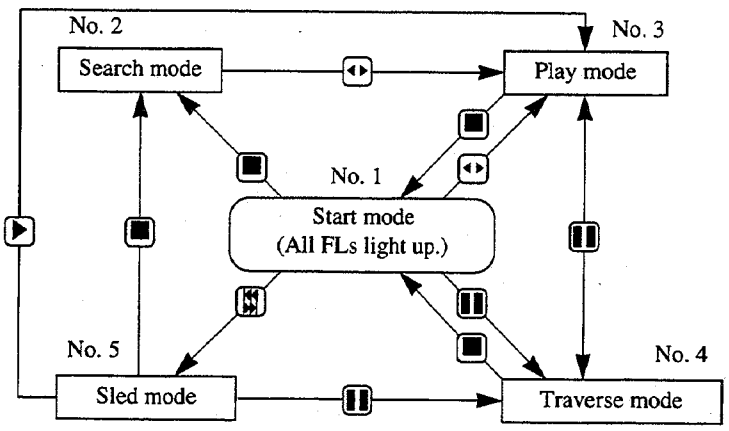

If the DISC DIRECT PLAY button is pressed, the machine performs the same operation as the PLAY button is pressed as shown. If the tray is opened by pressing OPEN/CLOSE button during Play mode or Traverse mode, the machine returns to the Start mode.

A 3CD C.B (PATTERN SIDE)

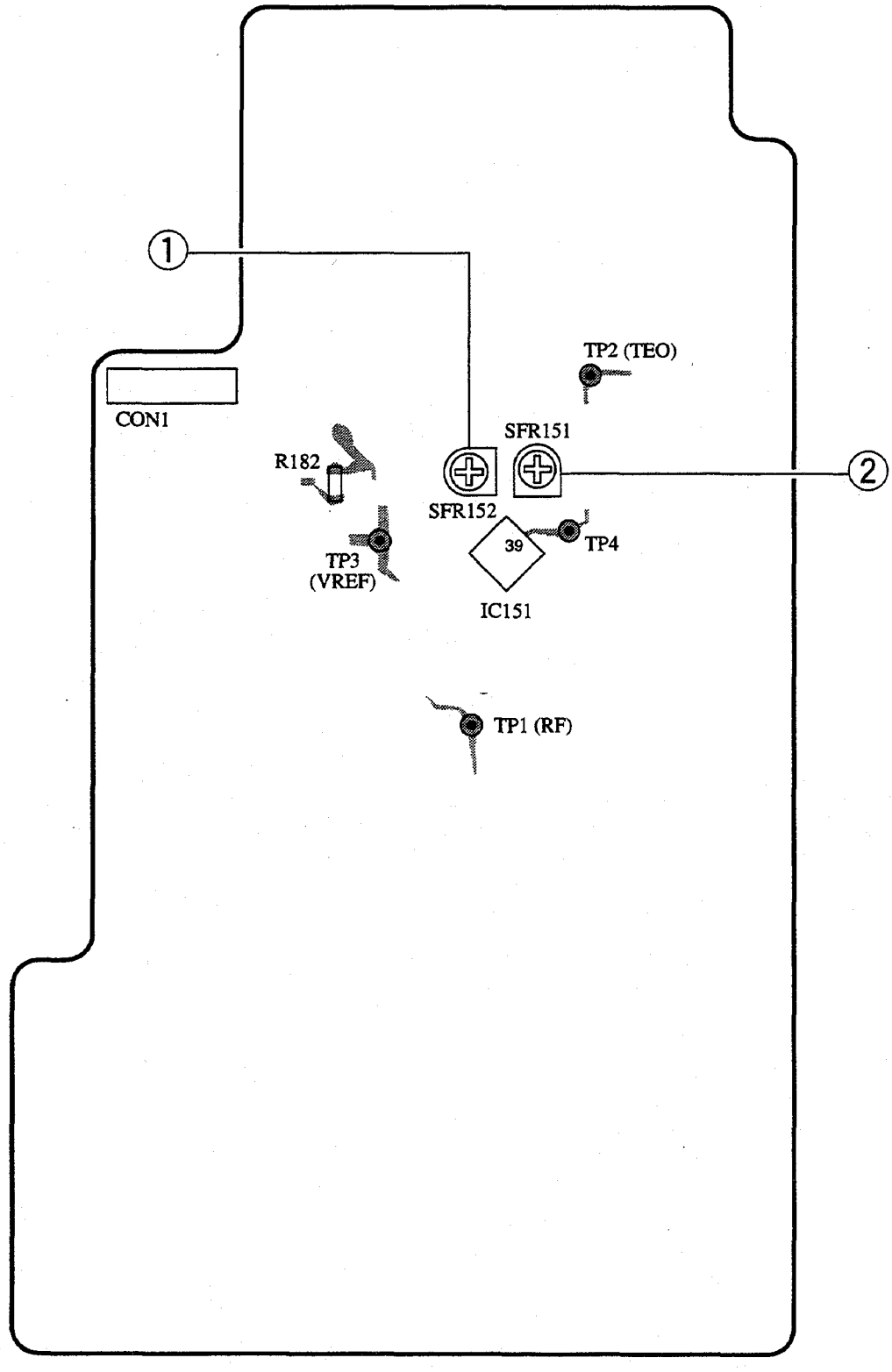

Note:
- Connect a probe (10: 1) of the oscilloscope or the frequency counter to a test point.
- During adjustment, connect (⊖) pin of an oscilloscope to TP3 (VREF).

1. Focus Bias Adjustment

Make the focus bias adjustment when replacing and repairing the optical block.

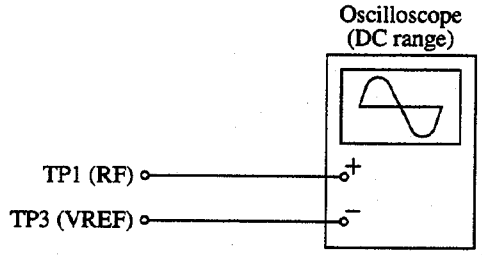

1) Connect an oscilloscope to test points TP1 (RF) and TP3 (VREF).
2) Turn on the power switch.
3) Insert test disc TCD-782 (YEDS-18) and play back the second program.
4) Adjust SFR152 so that RF signal of the test point TP2 (RF) is MAX and CLEARREST.

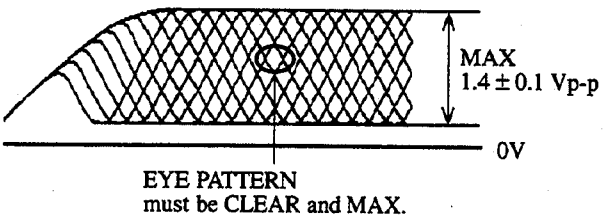

VOLT/DIV: 0.5V
TIME/DIV: 0.5μS

Note : The current of the laser signal can be checked with the voltages on both sides of R182 (voltage across 10Ω). The difference for the specified value shown on the label must be within ± 6.0mA.

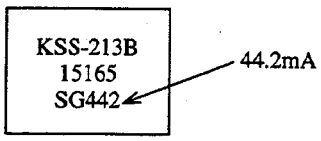

$$\text{Laser current Iop} = \frac{\text{Voltage across R182}}{10\Omega}$$

2. Tracking Balance Adjustment

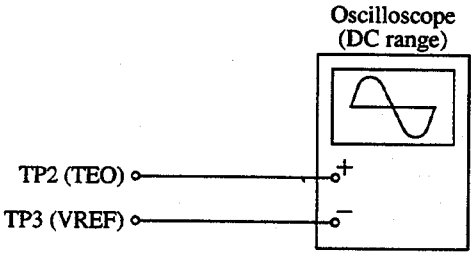

1) Short circuit between TP3 (VREF) and TP4.
2) Connect an oscilloscope to test points TP2 (TEO) and TP3 (VREF).
3) Turn on the power switch.
4) Insert test disc TCD-782 (YEDS-18) and press the PLAY (▶) button.
5) Adjust SFR151 so that the waveform on the oscilloscope is vertically symmetrical as shown in the figure below.
6) After the adjustment is completed, remove the connected lead wires from the test point TP3 (VREF) and TP4.

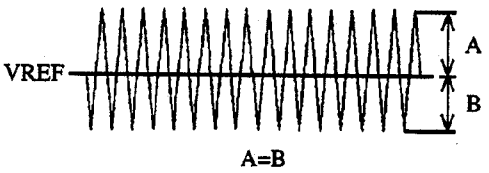

VOLT/DIV: 20mV
TIME/DIV: 2mS

4ZG-1Z

ELECTRICAL MAIN PARTS LIST

DESCRIPTIONで判断できない物は "REFERENCE NAME LIST" を参照してください。
If can't understand for Description please kindly refer to "REFERENCE NAME LIST".

REF. NO.	PART NO.	カンリ NO.	DESCRIPTION
IC			
	87-A20-165-010		C-IC,LA9230M
	87-A20-164-010		C-IC,LC78630E-T
	87-017-888-089		IC,NJM4558MD
	87-070-305-019		IC,BA6897S
	87-001-982-019		IC,TA7291S
TRANSISTOR			
	87-026-463-089		TR, 2SA933S (RS)
	89-406-555-089		TR,2SD655E
	89-320-011-089		TR,2SC2001K
	87-026-223-089		C-TR,DTC143TK
	89-113-187-089		TR,2SA1318TU
	87-026-470-089		TR,HN1C03 F B
	87-026-608-089		C-TR,DTC 123 JK
	89-327-125-089		C-TR,2SC2712GR<D>
DIODE			
	87-020-465-089		DIODE,1SS133
3CD C.B			
C11	87-016-081-089		C-CAP,S 0.1-16 RK
C12	87-012-157-089		C-CAP,S 330P-50 CH
C13	87-016-369-089		C-CAP,S 0.033-25 B K
C14	87-016-081-089		C-CAP,S 0.1-16 RK
C15	87-010-596-089		C-CAP,S 0.047-16 RK
C16	87-010-956-089		C-CAP,S 0.068-25 B
C17	87-010-182-089		C-CAP,S 2200P-50 B
C18	87-016-369-089		C-CAP,S 0.033-25 B K
C19	87-010-213-089		C-CAP,S 0.015-25 B
C20	87-010-178-089		C-CAP,S 1000P-50 B
C21	87-012-393-089		C-CAP,S 0.22-16,R,K
C22	87-016-083-089		C-CAP,S 0.15-16 RK
C23	87-010-197-089		C-CAP,S 0.01-25 B
C24	87-010-186-089		C-CAP,S 4700P-50 B
C25	87-015-694-089		CAP E 0.47-50-7L
C26	87-010-322-089		C-CAP,S 100P-50 CH
C27	87-015-686-089		CAP,E 22-25 7L
C28	87-015-697-089		CAP,E 3.3-50 7L
C29	87-010-184-089		C-CAP,S 3300P-50 B
C30	87-010-146-089		C-CAP,S 2P-50 CH
C31	87-010-186-089		C-CAP,S 4700P-50 B
C32	87-010-148-089		C-CAP,S 4P-50 CH
C33	87-016-081-089		C-CAP,S 0.1-16 RK
C35	87-010-196-089		C-CAP,S 0.1-25 F
C37	87-010-405-089		CAP,E 10-50 SME
C38	87-010-263-089		CAP,E 100-10 SME
C39	87-010-197-089		C-CAP,S 0.01-25 B
C40	87-010-401-089		CAP,E 1-50 SME
C41	87-016-463-089		C-CAP,S 0.33-16 B
C42	87-010-263-089		CAP,E 100-10 SME
C43	87-018-134-089		CAP,TC-U 0.01-16 Y
C44	87-010-263-089		CAP,E 100-10 SME
C46	87-010-196-089		C-CAP,S 0.1-25 F
C47	87-015-684-010		CAP,E 47-16 7L
C48	87-010-196-089		C-CAP,S 0.1-25 F
C50	87-010-197-089		C-CAP,S 0.01-25 B
C51	87-010-263-089		CAP,E 100-10 SME
C101	87-016-081-089		C-CAP,S 0.1-16 RK
C102	87-016-081-089		C-CAP,S 0.1-16 RK
C103	87-012-149-089		C-CAP, S 30P-50 CH
C105	87-010-196-089		C-CAP,S 0.1-25 F
C106	87-010-196-089		C-CAP,S 0.1-25 F
C108	87-010-154-089		C-CAP,S 10P-50 CH
C109	87-010-154-089		C-CAP,S 10P-50 CH
C111	87-010-196-089		C-CAP,S 0.1-25 F
C112	87-010-404-089		CAP,E 4.7-50 SME
C113	87-010-196-089		C-CAP,S 0.1-25 F
C114	87-010-263-089		CAP,E 100-10 SME
C201	87-010-318-089		C-CAP,S 47P-50 CH
C202	87-010-318-089		C-CAP,S 47P-50 CH
C203	87-010-321-089		C-CAP,S 82P-50 CH
C204	87-010-321-089		C-CAP,S 82P-50 CH
C205	87-010-321-089		C-CAP,S 82P-50 CH
C206	87-010-321-089		C-CAP,S 82P-50 CH
C207	87-010-318-089		C-CAP,S 47P-50 CH
C208	87-010-318-089		C-CAP,S 47P-50 CH
C209	87-010-318-089		C-CAP,S 47P-50 CH
C210	87-010-318-089		C-CAP,S 47P-50 CH
C211	87-010-403-089		CAP,E 3.3-50 SME
C212	87-010-403-089		CAP,E 3.3-50 SME
C213	87-010-186-089		C-CAP,S 4700P-50 B
C214	87-010-186-089		C-CAP,S 4700P-50 B
C215	87-010-555-049		CAP,E 100-10 GAS
C216	87-010-384-089		CAP,E 100-25 SME
C301	87-010-196-089		C-CAP,S 0.1-25 F
C302	87-010-260-089		CAP,E 47-25 SME
C501	87-010-221-089		CAP,E 470-10 11L
C502	87-010-197-089		C-CAP,S 0.01-25 B
C504	87-010-196-089		C-CAP,S 0.1-25 F
C505	87-010-196-089		C-CAP,S 0.1-25 F
C506	87-010-196-089		C-CAP,S 0.1-25 F
C507	87-010-196-089		C-CAP,S 0.1-25 F
C509	87-010-196-089		C-CAP,S 0.1-25 F
C510	87-010-196-089		C-CAP,S 0.1-25 F
C601	87-010-197-089		C-CAP,S 0.01-25 B
C602	87-010-381-089		CAP,E 330-16 SME
C603	87-010-196-089		C-CAP,S 0.1-25 F
C701	87-010-322-089		C-CAP,S 100P-50 CH
C702	87-010-322-089		C-CAP,S 100P-50 CH
C703	87-010-322-089		C-CAP,S 100P-50 CH
C704	87-010-322-089		C-CAP,S 100P-50 CH
C705	87-018-131-089		CAP,TC-U 1000P-50 B
C901	87-010-260-089		CAP,E 47-25 SME<D>
C902	87-010-196-089		C-CAP,S 0.1-25 F<D>
FC1	85-NFT-611-119		FF-CABLE,16P-1.0
FC4	84-ZG1-614-219		CABLE,FFC 5P-1.25
FC5	84-ZG1-630-019		CABLE FFC 6P-1.25
L11	87-003-102-089		COIL,10UH
LED901	87-A40-123-019		LED,SLZ-8128A-01-B<D>
M601	87-045-383-019		MOT,M9I T2
R102	87-022-345-089		C-RES,S 1.2K-1/10W F
SW701	87-036-109-019		SW,PUSH SPPB 61
SW702	87-036-109-019		SW,PUSH SPPB 61
X101	87-030-402-089		VIB,XTAL 16.9344 MHZ
LED C.B			
LED701	87-070-200-089		LED,SLP636C-81-S-T1
LED702	87-017-350-080		LED,SEL1550CM
LED703	87-017-350-080		LED,SEL1550CM
LED704	87-070-200-089		LED,SLP636C-81-S-T1

REF. NO.	PART NO.	カンリ NO.	DESCRIPTION
T-T C.B			
C401	87-018-214-089		CAP TC U 0.1-50 F
M401	87-045-364-019		MOTOR,(BCH3B14)
PS401	87-026-573-019		P-SNSR,GP1S53V
DRIVE C.B			
M1	87-045-358-019		MOT,RF-310TA 43
M2	87-045-356-019		MOT,RF-310TA 30
SW1	87-A90-042-019		SW,LEAF MSW 17310 MVPO

○ チップ抵抗部品コード／CHIP RESISTOR PART CODE

チップ抵抗部品コードの成り立ち
Chip Resistor Part Coding

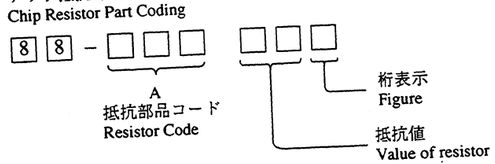

チップ抵抗
Chip resistor

容量 Wattage	種類 Type	許容誤差 Tolerance	記号 Symbol	寸法／Dimensions (mm) 外形／Form	L	W	t	抵抗コード：A Resistor Code: A
1／16W	1608	±5%	CJ	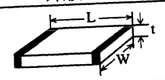	1.6	0.8	0.45	108
1／10W	2125	±5%	CJ		2	1.25	0.45	118
1／8W	3216	±5%	CJ		3.2	1.6	0.55	128

Refer to the following pages for the 4ZG-1 and the common sections.

■ MECHANICAL EXPLODED VIEW 1 ／ 1

See page 95

■ MECHANICAL PARTS LIST 1 ／ 1

See page 96

VIDE-V16442-a3 / Druck: 37

BLOCK DIAGRAM

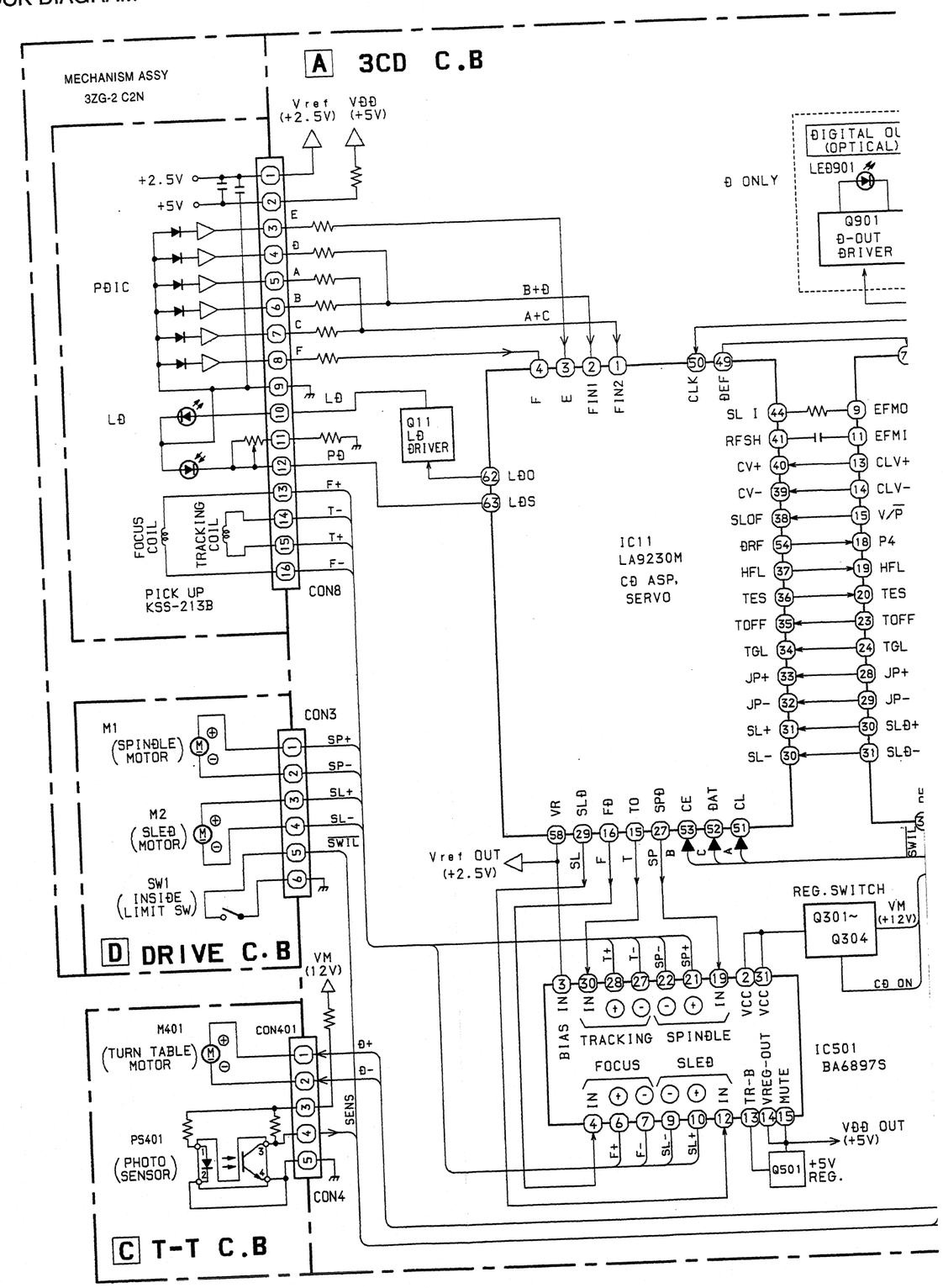

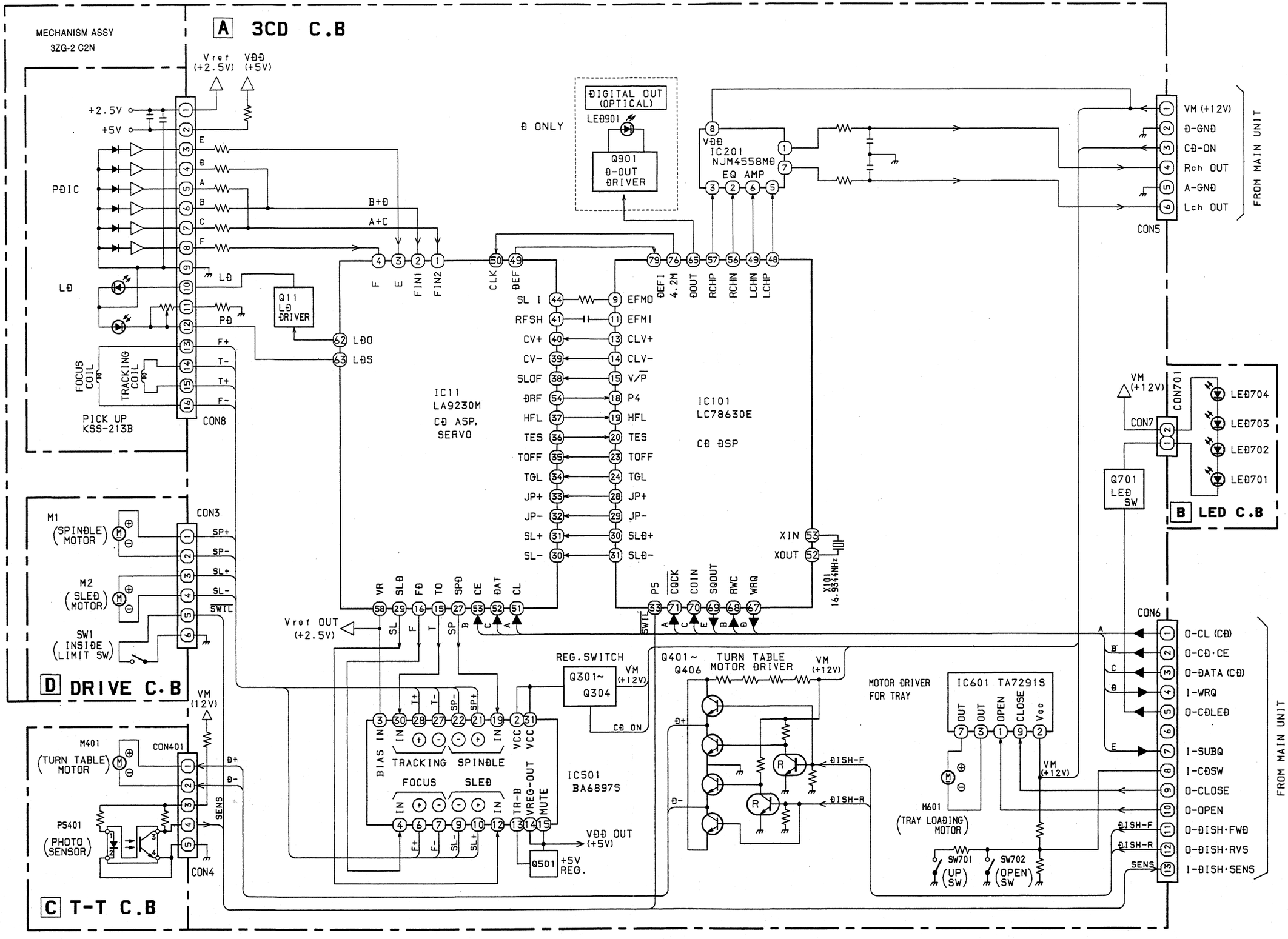
A 3CD C.B
MECHANISM ASSY
3ZG-2 C2N
Vref (+2.5V)
VDD (+5V)
+2.5V
+5V
PDIC
LD
PICK UP
KSS-213B
CON8
FOCUS COIL
TRACKING COIL
Q11
LD DRIVER
PD
B+D
A+C
D ONLY
DIGITAL OUT (OPTICAL)
LED901
Q901
D-OUT DRIVER
VDD
IC201
NJM4558MD
EQ AMP
CON5
VM (+12V)
D-GND
CD-ON
Rch OUT
A-GND
Lch OUT
FROM MAIN UNIT
IC11
LA9230M
CD ASP, SERVO
IC101
LC78630E
CD DSP
SL I
RFSH
CV+
CV-
SLOF
DRF
HFL
TES
TOFF
TGL
JP+
JP-
SL+
SL-
EFMO
EFMI
CLV+
CLV-
V/P
P4
HFL
TES
TOFF
TGL
JP+
JP-
SLD+
SLD-
XIN
XOUT
X101
16.9344MHz
VM (+12V)
CON7
CON701
LED704
LED703
LED702
LED701
Q701
LED SW
B LED C.B
M1
(SPINDLE) MOTOR
M2
(SLED) MOTOR
SW1
(INSIDE LIMIT SW)
CON3
D DRIVE C.B
Vref OUT (+2.5V)
REG.SWITCH
Q301~ Q304
CD ON
TRACKING
SPINDLE
FOCUS
SLED
IC501
BA6897S
Q501
+5V REG.
Q401~ Q406
TURN TABLE MOTOR DRIVER
MOTOR DRIVER FOR TRAY
IC601 TA7291S
M601
(TRAY LOADING) MOTOR
SW701
(UP SW)
SW702
(OPEN SW)
DISH-F
DISH-R
M401
(TURN TABLE) MOTOR
CON401
PS401
(PHOTO SENSOR)
CON4
C T-T C.B
CON6
O-CL (CD)
O-CD·CE
O-DATA (CD)
I-WRQ
O-CDLED
I-SUBQ
I-CDSW
O-CLOSE
O-OPEN
O-DISH·FWD
O-DISH·RVS
I-DISH·SENS
FROM MAIN UNIT

WAVE FORM

① IC11 Pin ㊶ (RFSM)

VOLT/DIV: 0.5V
TIME/DIV: 1μS

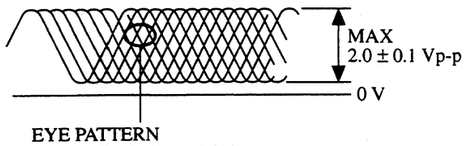

EYE PATTERN
must be CLEAR and MAX.

② IC11 Pin ⑯ (FD)

VOLT/DIV: 100mV
TIME/DIV: 1mS

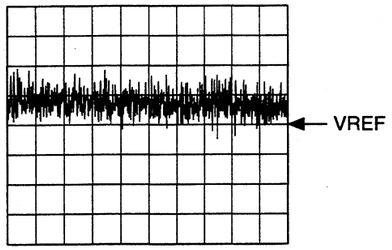

③ IC11 Pin ⑮ (TO)

VOLT/DIV: 100mV
TIME/DIV: 1mS

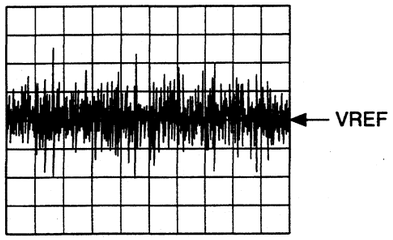

④ IC11 Pin ㉗ (SPD)

VOLT/DIV: 100mV
TIME/DIV: 1mS

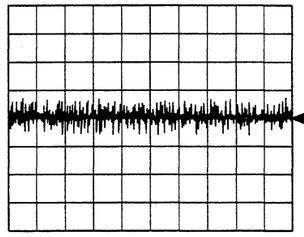

⑤ IC11 Pin ㉙ (SLD)

VOLT/DIV: 200mV
TIME/DIV: 2S

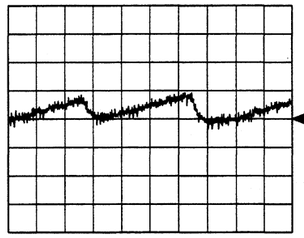

IC BLOCK DIAGRAM

IC, TA7291

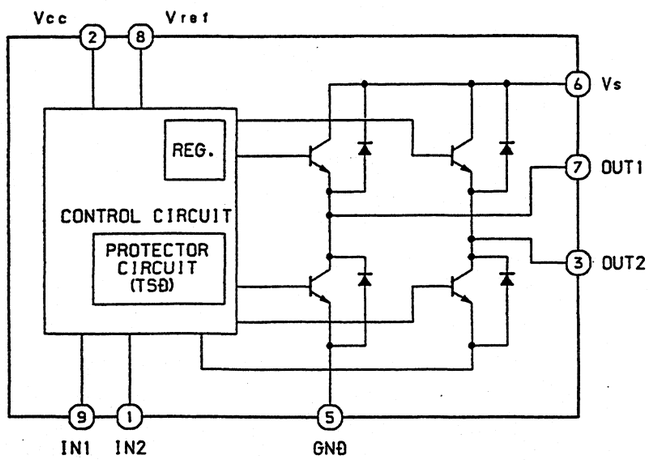

INPUT		OUTPUT		MODE
IN1	IN2	OUT1	OUT2	
0	0	∞	∞	STOP
1	0	H	L	CW
0	1	L	H	CCW
1	1	L	L	BRAKE

∞ : HI IMPEDANCE
NOTE : INPUT "H" ACTIVE

SCHEMATIC DIAGRAM

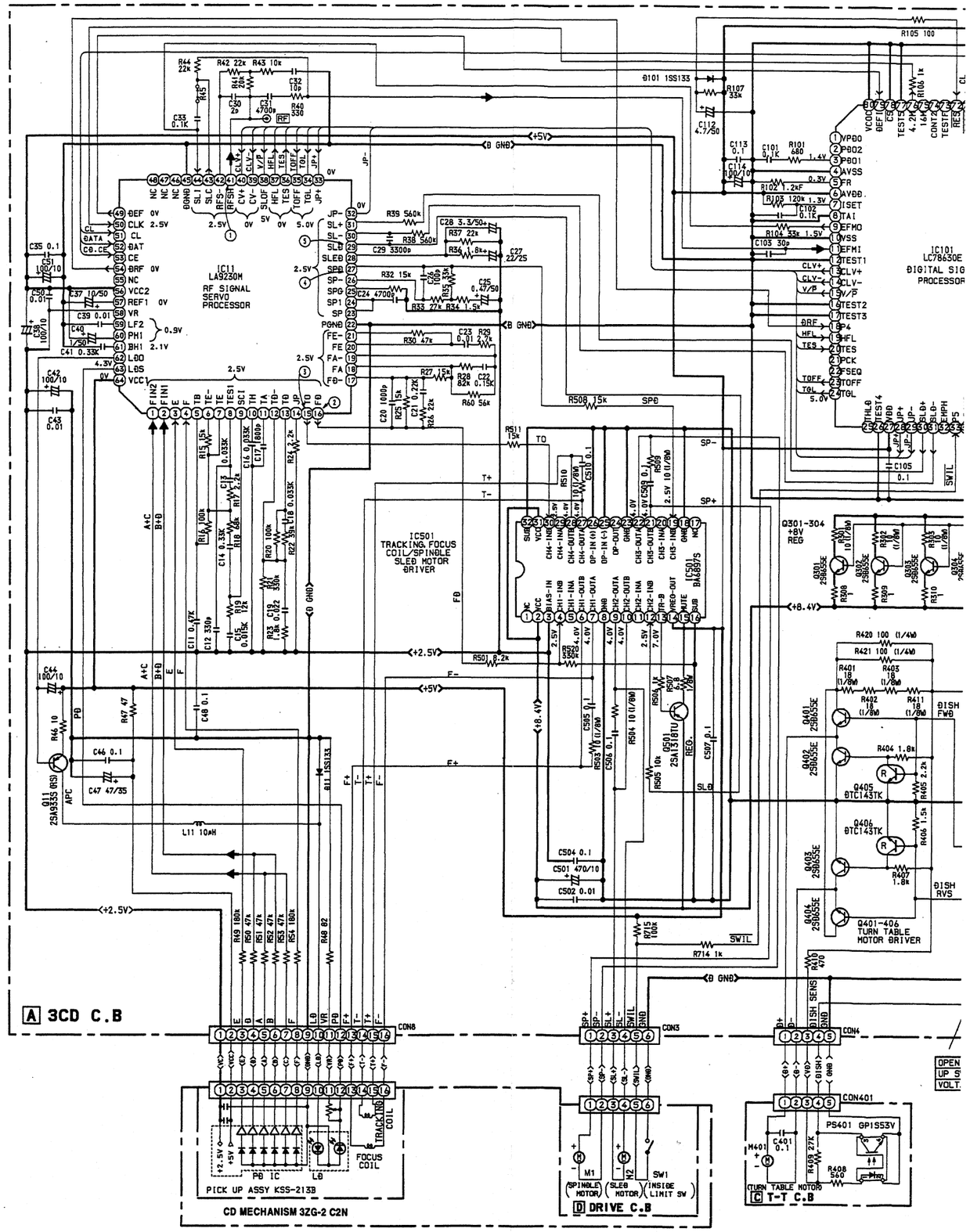

SCHEMATIC DIAGRAM

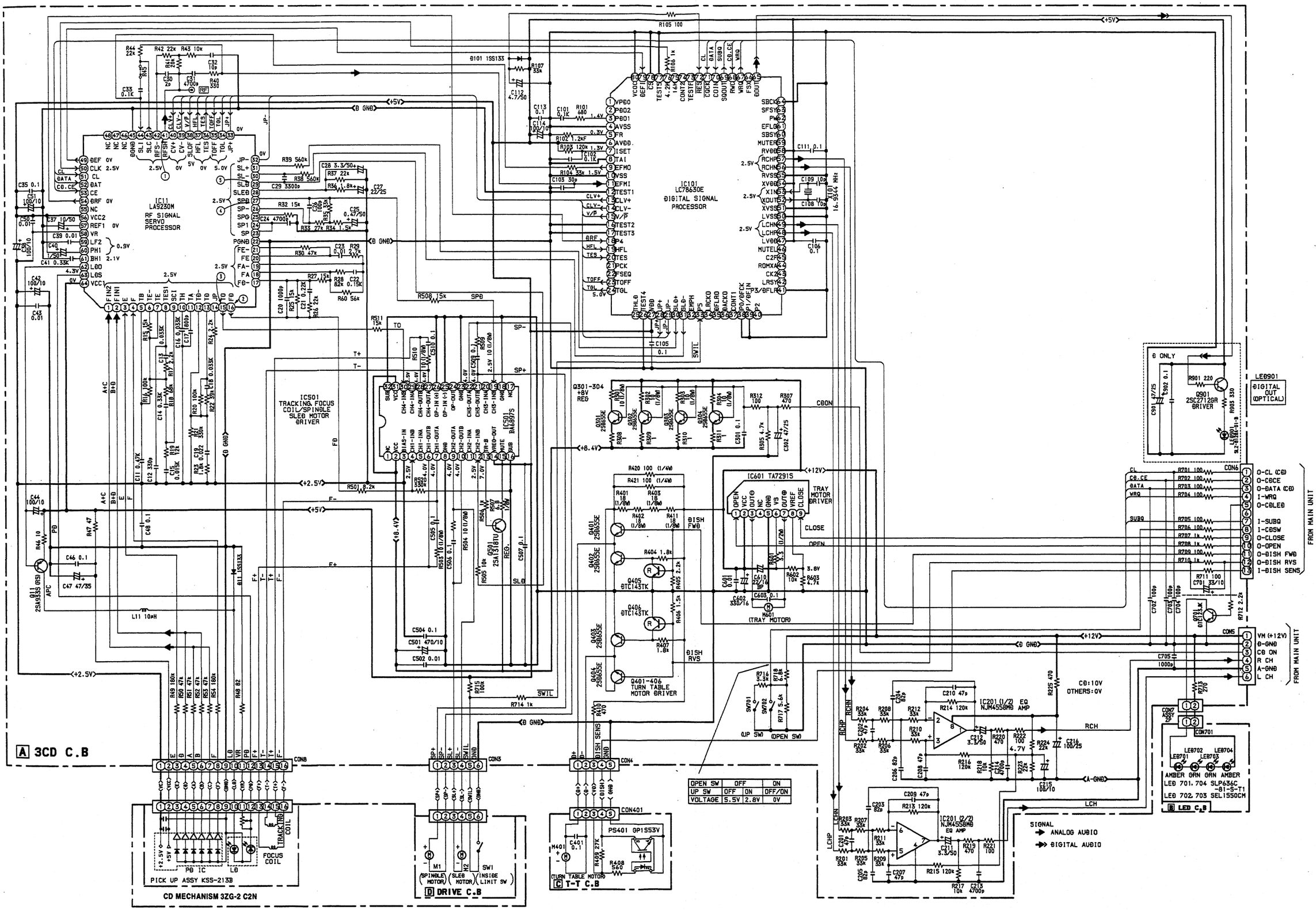

OPEN SW	OFF		ON
UP SW	OFF	ON	OFF/ON
VOLTAGE	5.5V	2.8V	0V

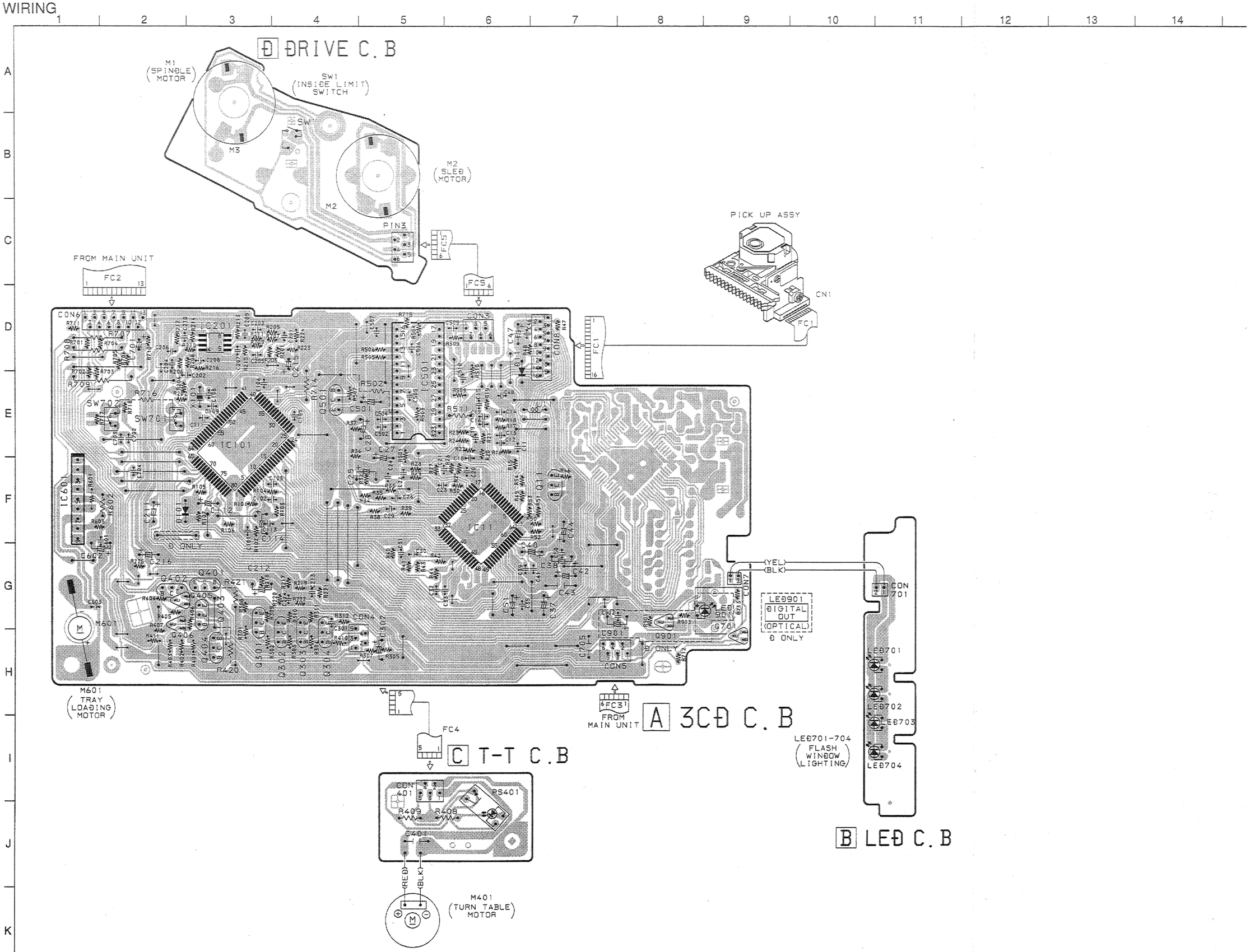
D DRIVE C.B
M1 (SPINDLE MOTOR)
SW1 (INSIDE LIMIT SWITCH)
M2 (SLED MOTOR)
PIN3
FC5
FC6
FROM MAIN UNIT
FC2
PICK UP ASSY
CN1
FC1
M601 (TRAY LOADING MOTOR)
FC3
FROM MAIN UNIT
A 3CD C.B
LED901 DIGITAL OUT (OPTICAL) D ONLY
(YEL)
(BLK)
CON 701
LED701
LED702
LED703
LED704
LED701-704 (FLASH WINDOW LIGHTING)
B LED C.B
FC4
C T-T C.B
CON 401
PS401
(RED)
(BLK)
M401 (TURN TABLE MOTOR)

IC DESCRIPTION

IC, LC78630E

Pin No.	Pin Name	I/O	Description
1	VPDO	O	Vari-pitch PLL charge pump output pin. This pin must be open when not used.
2	PDO2	O	Bit clock playback PLL charge pump output pin during 2 times and 4 times speed. This pin must be open when not used.
3	PDO1	O	Bit clock playback PLL charge pump output pin during normal speed.
4	AVSS	—	Analog system GND. Normally 0V.
5	FR	I	An external resistor to set built-in VCO frequency range is connected to this pin.
6	AVDD	—	Analog system GND.
7	ISET	I	An external resistor set PD01 and PD02 output current is connected to this pin.
8	TAI	I	Test input pin with built-in pull-down resistor.
9	EFMO	O	EFM signal output pin.
10	VSS	—	Digital system GND. Normally 0V.
11	EFMI	I	EFM signal input pin.
12	TEST1	I	Test input pin with built-in pull-down resistor.
13	CLV+	O	Spindle servo control output pin. Acceleration when CLV+ is "H".
14	CLV-	O	Deceleration when CLV- is "H".
15	V/$\overline{P}$	O	Rough servo/phase control automatic selection monitoring output pin. Rough servo at "H". Phase control mode at "L".
16, 17	TEST2, TEST3	I	Test input pin with built-in pull-down resistor.
18	P4	I/O	Input/output port.
19	HFL	I	Tracking detection signal input pin. Schmitt input.
20	TES	I	Tracking error signal input pin. Schmitt input.
21	PCK	O	EFM data playback bit clock monitoring pin. 4.3218 MHz when phase is locked during normal speed playback.
22	FSEQ	O	Sync signal detection output pin. When the sync signal detected from the EFM signal agrees with the internally generated sync signal, "H" output.
23	TOFF	O	Tracking OFF output pin.
24	TGL	O	Tracking gain selector output pin. Gain is increased at "L".
25	THLD	O	Tracking hold output pin.
26	TEST4	I	Test input pin with built-in pull-down resistor.
27	VDD	—	Digital system GND.
28, 29	JP+, JP-	O	Tracking jump output pin. JP+ "H" occurs at acceleration during jump toward outside or decelerator toward inside. JP- "H" occurs at acceleration during jump toward inside or deceleration toward outside.
30, 31	SLD+, SLD-	O	Sled output pin. Four different level can be set using commands.
32	EMPH	O	Emphasis monitoring output. "H" indicates that emphasis disc is being played back.
33	P5	I/O	Input/output.
34	LRCKO	O	Digital filter output. LR clock output pin.
35	DFLRO	O	Digital filter output. LR data output pin. DF is turned OFF with the DFOFF command.
36	DACKO	O	Digital filter output. Bit clock output pin.
37	CONT1	O	Output port.

Pin No.	Pin Name	I/O	Description
38	P0/DFCK	I/O	Input/output port. The DF bit clock input pin during the anti-shock mode.
39	P1/DFIN	I/O	Input/output port. The DF data input pin during the anti-shock mode.
40	P2	I/O	Input/output port. Deemphasis filter ON/OFF selection input pin during the anti-shock mode. Deemphasis filter ON at "H".
41	P3/DFLR	I/O	Input/output port. The DF LR clock input pin during the anti-shock mode.
42	LRSY	O	For ROMXA • LR clock output pin.
43	CK2	O	For ROMXA • Bit clock output pin. Polarity inversion by the CK2CON command.
44	ROMXA	O	For ROMXA • Interpolation data output pin. The un-interpolated data is output with the ROMXA command.
45	C2F	O	For ROMXA • C2 flat output pin.
46	MUTEL	O	For 1-bit DAC • L-channel mute output pin.
47	LVDD	—	For 1-bit DAC • L-channel power supply.
48	LCHP	O	For 1-bit DAC • L-channel P output pin.
49	LCHN	O	For 1-bit DAC • L-channel N output pin.
50	LVSS	—	For 1-bit DAC • L-channel GND. Normally 0 V.
51	XVSS	—	Crystal oscillator GND. Normally 0 V.
52	XOUT	O	An external 16.9344 MHz crystal oscillator is connected to this pin.
53	XIN	I	33.8688 MHz crystal oscillator is connected during 4 time speed playback.
54	XVDD	—	Crystal oscillator GND.
55	RVSS	—	For 1-bit DAC • R-channel GND. Normally 0 V.
56	RCHN	O	For 1-bit DAC • R-channel N output pin.
57	RCHP	O	For 1-bit DAC • R-channel P output pin.
58	RVDD	—	For 1-bit DAC • R-channel power supply.
59	MUTER	O	For 1-bit DAC • R-channel mute output pin.
60	SBSY	O	Subcode block sync signal output pin.
61	EFLG	O	C1 and C2 error correction monitoring pin.
62	PW	O	ubcode P, Q, R, S, T, U, V and W output pin.
63	SFSY	O	Subcode frame sync signal output pin. The level falls down when the subcode is in standby.
64	SBCK	I	Subcode read clock input pin. Schmitt input. This pin must be connected GND when not used.
65	DOUT	O	Digital output pin.
66	FSX	O	7.35 kHz sync signal divided from the crystal oscillator is output to this pin.
67	WRQ	O	Subcode Q output standby output pin.
68	RWC	I	Read/write control input pin.
69	SQOUT	O	Subcode Q output pin.
70	COIN	I	Microprocessor command input pin.
71	$\overline{CQCK}$	I	Command input read clock or subcode read clock input from SQOUT. Schmitt input.
72	$\overline{RES}$	I	Chip reset input pin. This pin goes to "L" once when the main power is turned on.
73	TESTF	O	Test output pin.
74	CONT2	O	Output port.

Pin No.	Pin Name	I/O	Description
75	16M	O	16.9344 MHz crystal output pin. 33.8688 MHz is output during 4 times speed playback.
76	4.2M	O	4.2336 MHz output pin.
77	TEST5	I	Test input pin with built-in pull-down resistor.
78	$\overline{CS}$	I	Chip select input pin with built-in pull-down resistor.
79	DEFI	I	Defect detection signal input pin. This pin must be connected GND when not used.
80	VCOC	I	Vari-pitch VCO control input pin. This pin must be connected GND when not used.

IC, LA9230M

Pin No.	Pin Name	I/O	Description
1	FIN2	I	Photo diode of pickup is connected to this pin. This signal is added to the FIN1 pin signal to produce the RF signal and subtracted to produce the FE signal.
2	FIN1	I	Photo diode of pickup is connected to this pin.
3	E	I	Photo diode of pickup is connected to this pin. This signal is subtracted from the F pin signal to produce the FE signal.
4	F	I	Photo diode of pickup is connected to this pin.
5	TB	I	DC component of the TE signal is input to this pin.
6	TE-	I	The TE signal gain adjustment resistor is connected between this pin and the TE pin.
7	TE	O	The TE signal output pin.
8	TESI	I	TES (Track Error Sense) comparator input pin. The TE signal is input after passing through band-pass filter.
9	SCI	I	Shock sense input signal is connected to this pin.
10	TH	I	Tracking gain time constant setting pin.
11	TA	O	TA amplifier output pin.
12	TD-	I	An external tracking phase compensation constant is connected between the TD and VR pins.
13	TD	I	An external tracking phase compensation setting pin.
14	JP	I	Tracking jump signal (kick pulse) amplitude setting pin.
15	TO	O	Tracking control signal output pin.
16	FD	O	Focusing control signal output pin.
17	FD-	I	A focusing phase compensation constant is connected between the FD and FA pins.
18	FA	I	A focusing phase compensation constant is connected between the FD- and FA- pins.
19	FA-	I	A focusing phase compensation constant is connected between the FA and FE pins.
20	FE	O	FE signal output pin.
21	FE-	I	An external FE signal gain setting resistor is connected between the TE and this pins.
22	AGND	—	Analog signal GND.
23	SP	O	Single-ended output of the CV+ and CV- pin input signal.
24	SPI	I	Spindle amplifier input.
25	SPG	I	An external spindle gain in 12 cm mode setting resistor is connected to this pin.
26	SP-	I	An external spindle phase compensation constant together with the SPD pin, is connected to this pin.
27	SPD	O	Spindle control signal output pin.
28	SLEQ	I	Sled phase compensation constant is connected to this pin.
29	SLD	O	Sled control signal output pin.
30, 31	SL-, SL+	I	Sled advance signal input pin from microprocessor.
32, 33	JP-, JP+	I	Tracking jump signal input pin from DSP.
34	TGL	I	Tracking gain control signal input pin from DSP. Gain low when TGL = "H".
35	TOFF	I	Tracking off control signal input pin from DSP. Tracking off when TGL = "H".
36	TES	O	The TES signal is output from this pin to DSP.
37	HFL	I	The (HIGH FREQUENCY LEVEL) is used to judge whether the main beam is positioned above the bits or mirror.

Pin No.	Pin Name	I/O	Description
38	SLOF	I	Sled servo off control input pin.
39, 40	CV-, CV+	I	CLV error signal input pin from DSP.
41	RFSM	O	RF output pin.
42	RFS-	I	RF gain setting and 3T compensation constant setting pin together with RFSM pin.
43	SLC	O	The (SLICE LEVEL CONTROL) is the signal which control the data slice level of the RF waveform with DSP. The (SLICE LEVEL CONTROL) is from this pin.
44	SLI	I	The input signal which controls the data slice level with DSP, is connected to this pin.
45	DGND	—	Digital system GND.
46	NC [FSC]	—	No connection. (Output pin for focus search smoothing capacity.)
47, 48	NC	—	No connection.
49	DEF	O	Disc defect detection output pin.
50	CLK	I	Reference clock input pin. The DSP 4.23 MHz is input to this pin.
51	CL	I	Microprocessor command clock input pin.
52	DAT	I	Microprocessor command data input pin.
53	CE	I	Microprocessor command chip enable input pin.
54	DRF	O	(DETECT RF) RF level detection output.
55	NC	—	No connection.
56	VCC2	—	Servo system and digital system Vcc pin.
57	REFI	I	A bypass capacitor for reference voltage is connected to this pin.
58	VR	O	Reference voltage output pin.
59	LF2	I	An external disc defect detection constant is connected to this pin.
60	PH1	I	An external RF signal peak holding capacitor is connected to this pin.
61	BH1	I	An external RF signal bottom holding capacitor is connected to this pin.
62	LDD	O	APC circuit output pin.
63	LDS	I	APC circuit input pin.
64	VCC1	—	RF system Vcc pin.

TEST MODE

1. How to Activate CD Test Mode
   Insert the AC plug while pressing the function CD button.
   All FL display tubes will light up, and the test mode will be activated.

2. How to Cancel CD Test Mode
   Either one of the following operations will cancel the CD test mode.
   - Press the function button. (except CD function button)
   - Press the power switch button.
   - Disconnect the AC plug

3. CD Test Mode Functions
   When test mode is activated, the following mode functions from No.1 to No.5 can be used by pressing the operation keys.

Mode/No.	Operation	FL display	Operation	Contents
Start mode No.1	Activation	All lamps light	• Test mode is activated. • CD block power is ON.	• FL display check (All displays light.)
Search mode No.2	■ key	00--	• Laser diode turns always ON. • Continual focus search (The pickup lens repeats the full-swing up-down motion.) * Avoid continual searches that last for more than 10 minutes. * NOTE 1	• APC circuit check • Laser current measurement (Laser current control. Across a resistor connected between emitter and GND.) FOCUS SERVO • Check focus search waveform • Check focus error waveform (FOK/FZC are not monitored in the search mode)
Play mode No.3	◀▶ key	001	• Normal playback • Focus search is continued if TOC cannot be read. * NOTE 1	FOCUS SERVO/TRACKING SERVO CLV SERVO/SLED SERVO Check DRF
Traverse mode No.4	▮▮ key	001	• During normal disc playback Press once; tracking servo OFF Press twice; tracking servo ON * NOTE 2	TRACKING SERVO ON/OFF Tracking balance (traverse) check
Sled mode No.5	⏮ key ⏭	All lamps light	• Pickup moves to the outermost track • Pickup moves to the innermost track * NOTE 3 (During playback, machine operates normally.)	SLED SERVO Check SLED mechanism operation

* NOTE 1: There are cases when the tracking servo cannot be locked owing to the protection circuit being operated when heat builds up in the driver IC if the focus search is operated continually for more than 10 minutes. In these cases the power supply should be switched off for 10 minutes until heat has been reduced and then re-started.

* NOTE 2: Do not press the ⏮ or ⏭ keys when the machine is in the ▮▮ status is active. If they are pressed, playback will not be possible after the ▮▮ status has been canceled. If the ⏮ or ⏭ keys are pressed in the ▮▮ status, press the ■ key and return to the start mode (No.1).

* NOTE 3: When pressing the ⏮ or ⏭ keys, take care to avoid damage to the gears. Because the sled motor is activated when the ⏮ or ⏭ keys are pressed, even when the pick-up is at the outermost or innermost track.

4. Operation Outline
   The operation of each mode is carried out in the direction of the arrows from the start mode as indicated in the following illustration.

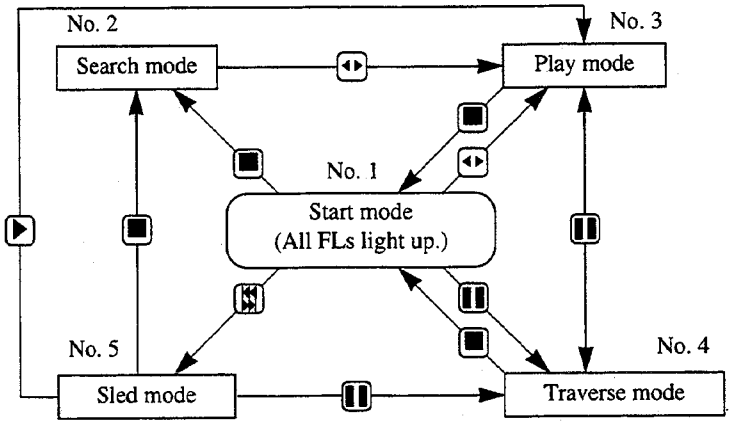

If the DISC DIRECT PLAY button is pressed, the machine performs the same operation as the PLAY button is pressed as shown. If the tray is opened by pressing OPEN/CLOSE button during Play mode or Traverse mode, the machine returns to the Start mode.

A 3CD C.B (PATTERN SIDE)

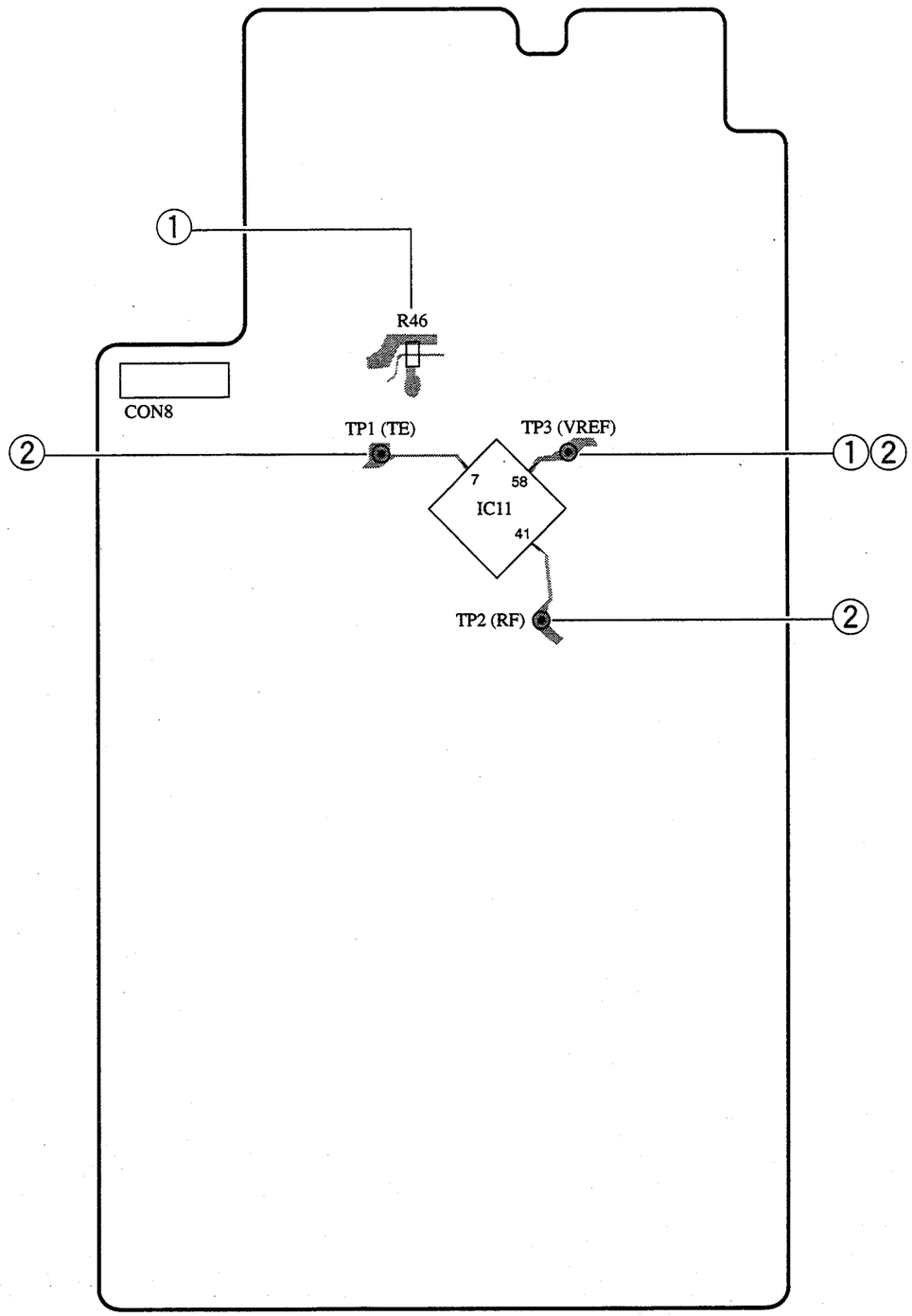

Note:
- Connect a probe (10: 1) of the oscilloscope or the frequency counter to a test point.
- During adjustment, connect (⊖) pin of an oscilloscope to TP3 (VREF).

1. RF waveform Check

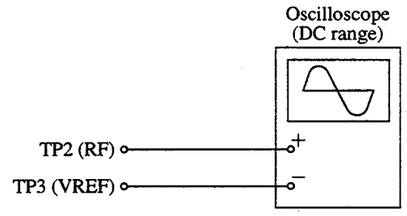

1) Connect an oscilloscope to test points TP2 (RF) and TP3 (VREF).
2) Turn on the power switch.
3) Insert test disc TCD-782 (YEDS-18) and play back the second program.
4) Confirm that the waveform at oscilloscope has amplitude of 2.1 Vp-p, and clear wedge area in its center.

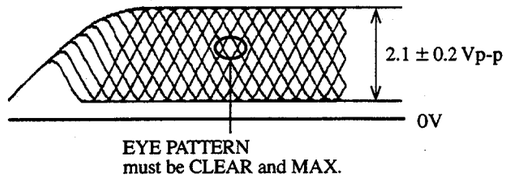

VOLT/DIV: 50mV
TIME/DIV: 0.5µS

Note: The current of the laser signal can be checked with the voltages on both sides of R46 (voltage across 10Ω). The difference for the specified value shown on the label must be within ± 6.0mA.

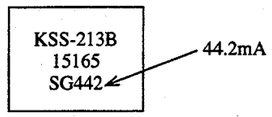

$$\text{Laser current Iop} = \frac{\text{Voltage across R46}}{10\Omega}$$

2. Tracking Balance Check

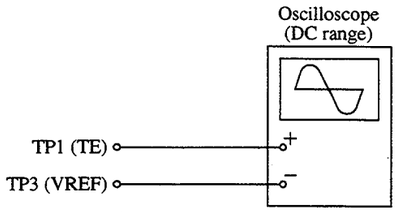

1) Connect an oscilloscope to test points TP1 (TE) and TP3 (VREF).
2) Start up the CD test mode.
3) Insert the test disc TCD-782(YEDS-18) and enter the traverse mode of the CD test mode.
4) Confirm that the traverse waveform on an oscilloscope is vertically symmetrical as shown in the figure below.
5) After confirming the waveform, release the CD test mode.

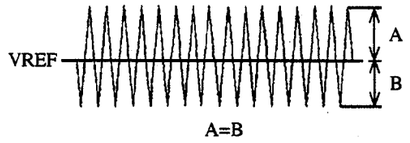

VOLT/DIV: 20mV
TIME/DIV: 1mS

CD MECHANISM EXPLODED VIEW 1 ／ 1 (3ZG-2 C2N <Z>)

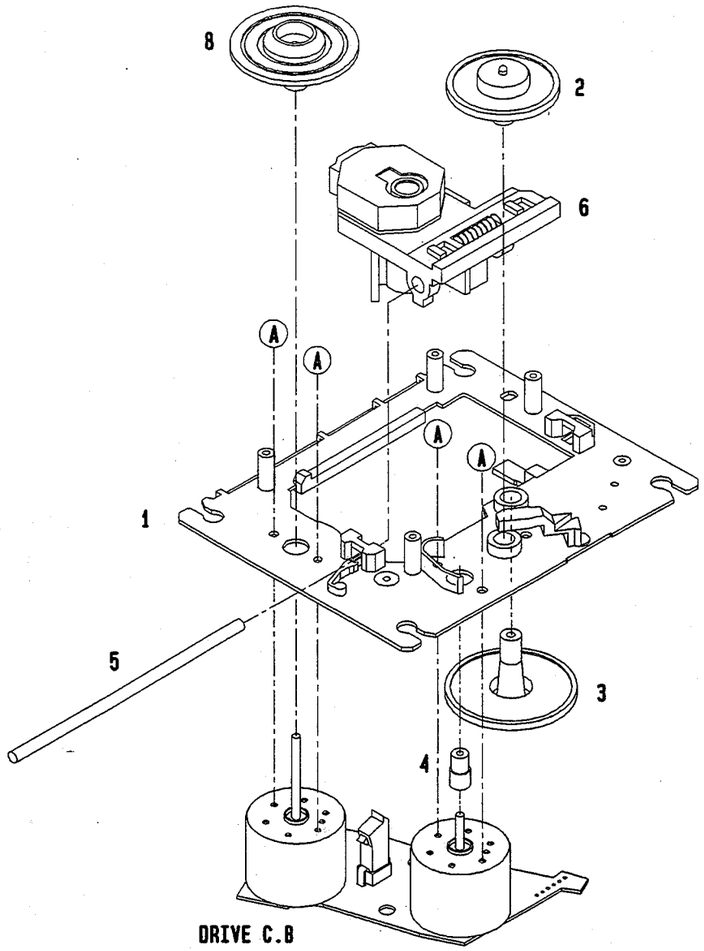

CD MECHANISM PARTS LIST 1 ／ 1 (3ZG-2 C2N <Z>)

DESCRIPTIONで判断できない物は “REFERENCE NAME LIST” を参照してください。
If can’t understand for Description please kindly refer to “REFERENCE NAME LIST”.

REF. NO	PART NO.	ｶﾝﾘ NO.	DESCRIPTION
1	83-ZG2-202-71K		O-SERT S ASSY,S
2	83-ZG2-204-419		GEAR,A
3	83-ZG2-205-219		GEAR,B
4	83-ZG2-220-01K		GEAR MOTOR 2
5	83-ZG2-207-119		SHAFT,SLIDE
6	87-070-445-010		PICK-UP,KSS-213B
8	83-ZG2-233-019		TURN TABLE,A5
A	87-261-032-219		SCREW V+2-3

USE MODEL LIST

CX-NAV70 (NSX-AV70)
CX-NAV700 (NSX-AV700)
CX-NAV71 (NSX-AV71)
CX-NAV80 (NSX-AV80)
CX-NAV800 (NSX-AV800)
CX-NAV90 (NSX-AV90)
CX-NAV900 (NSX-AV900)
CX-NK300 (NSX-K300)
CX-NK700 (NSX-K700)
CX-NK77 (NSX-K77)
CX-NK80 (NSX-K80)
CX-NK90 (NSX-K90)
CX-NV300 (NSX-V300)
CX-NV3000 (NSX-V3000)
CX-NV3001 (NSX-V3001)
CX-NV390 (NSX-V390)
CX-NV500 (NSX-V500)
CX-NV700 (NSX-V700)
CX-NV705 (NSX-V705)
CX-NV710 (NSX-V710)
CX-NV715 (NSX-V715)
CX-NV720 (NSX-V720)
CX-NV770 (NSX-V770)
CX-NV800 (NSX-V800)
CX-NV8000 (NSX-V8000)
CX-NV8080 (NSX-V8080)
CX-NV820 (NSX-V820)
CX-NV900 (NSX-V900)
CX-NV9000 (NSX-V9000)
CX-NV9090 (NSX-V9090)
CX-NV915 (NSX-V915)
CX-NV929 (NSX-V929)
FD-NAKH8 (NSX-AKH8)
FD-NH8 (NSX-AVH8)
FD-NH8 (NSX-AVH8)
FD-NH80 (NSX-AVH80)
FD-NH9 (NSX-AVH9)
FD-NH9 (NSX-AVH9)
FD-NH90 (NSX-AVH90)
FD-SNAKH8 (NSX-AKH8)
FD-SNH9 (NSX-AVH9)

REFERENCE NAME LIST

ELECTRICAL SECTION

DESCRIPTION	REFERENCE NAME
ANT	ANTENNAS
C-	CHIP
C-CAP	CAP, CHIP
C-CAP TN	CAP, CHIP TANTALUM
C-COIL	COIL, CHIP
C-DI	DIODE, CHIP
C-DIODE	DIODE, CHIP
C-FET	FET, CHIP
C-FOTR	FILTER, CHIP
C-JACK	JACK, CHIP
C-LED	LED, CHIP
C-RES	RES, CHIP
C-SFR	SFR, CHIP
C-SLIDE SW	SLIDE SWITCH, CHIP
C-SW	SWITCH, CHIP
C-TR	TRANSISTOR, CHIP
C-VR	VOLUME, CHIP
C-ZENER	ZENER, CHIP
CAP, CER	CAP, CERA-SOL
CAP, E	CAP, ELECT
CAP, M/F	CAP, FILM
CAP, TC	CAP, CERA-SOL
CAP, TC-U	CAP, CERA-SOL SS
CAP, TN	CAP, TANTALUM
CERA FIL	FILTER, CERAMIC
CF	FILTER, CERAMIC
DL	DELAY LINE
E/CAP	CAP, ELECT
FILT	FILTER
FLTR	FILTER
FUSE RES	RES, FUSE
MOT	MOTOR
P-DIODE	PHOTO DIODE
P-SNSR	PHOTO SENSER
P-TR	PHOTO TRANSISTOR
POLY VARI	VARIABLE CAPACITOR
PPCAP	CAP, PP
PT	POWER TRANSFORMER
PTR, RES	PTR, MELF
RC	REMOTE CONTROLLER
RES NF	RES, NON-FLAMMABLE
RESO	RESONATOR
SHLD	SHIELD
SOL	SOLENOID
SPKR	SPEAKER
SW, LVR	SWITCH, LEVER
SW, RTRY	SWITCH, ROTARY
SW, SL	SWITCH, SLIDE
TC CAP	CAP, CERA-SOL
THMS	THERMISTOR
TR	TRANSISTOR
TRIMMER	CAP, TRIMMER
TUN-CAP	VARIABLE CAPACITOR
VIB, CER	RESONATOR, CERAMIC
VIB, XTAL	RESONATOR, CRYSTAL
VR	VOLUME
ZENER	DIODE, ZENER
サージサプレッサ	SERGESUPPRESSOR
セラコン	CAP,CERA

MECHANICAL SECTION

DESCRIPTION	REFERENCE NAME
ADHESHIVE	SHEET ADHESHIVE
AZ	AZIMUTH
BAR-ANT	BAR-ANTENNA
BAT	BATTERY
BATT	BATTERY
BRG	BEARING
BTN	BUTTON
CAB	CABINET
CASS	CASSETTE
CHAS	CHASSIS
CLR	COLLAR
CONT	CONTROL
CRSR	CURSOR
CU	CUSHION
CUSH	CUSHION
DIR	DIRECTION
DUBB	DUBBING
FL	FRONT LOADING
FLY-WHL	FLYWHEEL
FR	FRONT
FUN	FUNCTION
G-CU	G-CUSHION
HDL	HANDOL
HIMERON	CLOTH
HINGE, BAT	HINGE, BATTERY
HLDR	HOLDER
HT-SINK	HEAT SINK
IB	INSTRUCTION BOOKLET
IDLE	IDLER
IND, L-R	INDICATOR, L-R
KEY, CONT	KEY, CONTROL
KEY, PRGM	KEY, PROGRAM
KNOB, SL	KNOB, SLIDE
LBL	LABEL
LID, BATT	LID, BATTERY
LID, CASS	LID, CASSETTE
LVR	LEVER
P-SP	P-SPRING
PANEL, CONT	PANEL, CONTROL
PANEL, FR	PANEL, FRONT
PRGM	PROGRAM
PULLY, LOAD MO	PULLY, LOAD MOTOR
RBN	RIBBON
S-	SPECIAL
SEG	SEGMENT
SH	SHEET
SHLD-SH	SHIELD-SHEET
SL	SLIDE
SP	SPRING
SP-SCREW	SPECIAL-SCREW
SPACER, BAT	SPACER, BATTERY
SPR	SPRING
SPR-P	P-SPRING
SPR-PC-PUSH	P-SPRING, C-PUSH
T-SP	T-SPRING
TERM	TERMINAL
TRIG	TRIGGER
TUN	TUNING
VOL	VOLUME
W	WASHER
WHL	WHEEL
WORM-WHL	WORM-WHEEL
ジグアーム	ARM,SHAFT
ジグガイド	GUIDE,SHAFT
ストラップ	STRAP
トクナベ	S-SCREW
ヒンジ	HINGE
ヒンジビス	S-SCREW
ビスセレート	SCREW,SERRART

aiwa

aiwa SERVICE

NSX-H9
NSX-H90

SERVICE MANUAL

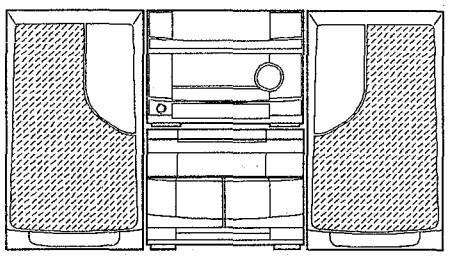

COMPACT DISC STEREO
CASSETTE RECEIVER

- BASIC TAPE MECHANISM: 2ZM-3MK2 PR2N
- BASIC CD MECHANISM: 4ZG-1WRNM
- TYPE. HE,HR,LH(H9) U(H90)

- If requiring information about the CD mechanism, see Service Manual of 4ZG-1WR. (S/M Code No. 09-965-128-10T) U16442

SYSTEM	AMPLIFIER	CASSETTE DECK CD PLAYER	REMOTE CONTROLLER	SPEAKERS
NSX-H9	RX-NH9	FD-NH9	RC-T501	SX-ANH9
NSX-H90	RX-NH90	FD-NH90	RC-T501	SX-ANH90

1939

S/M Code No. 09-966-141-50T

TABLE OF CONTENTS

SPECIFICATIONS 3

MODEL-NO. RX-NH9/NH90

ELECTRICAL MAIN PARTS LIST ..... 4~7
CHIP RESISTOR PART CODE 7
TRANSISTOR ILLUSTRATION 8
BLOCK DIAGRAM 9,10
WIRING-1(MAIN) 11,12
SCHEMATIC DIAGRAM-1(MAIN,AC-1,AC-2,PT-H) ..... 13~15
FL(BJ451GK) GRID ASSIGNMENT/ANODE CONNECTION 16
WIRING-2(FRONT,TRAY,MOTOR) 17,18
SCHEMATIC DIAGRAM-2(FRONT,TRAY,MOTOR,MVR) 19,20
WIRING-3(MVR,AC-1,AC-2,PT-H) 21,22
IC DESCRIPTION 23,24
IC BLOCK DIAGRAM ..... 25~27
ELECTRICAL ADJUSTMENT(TUNER) 28
PRACTICAL SERVICE FIGURE(TUNER) 29
MECHANICAL EXPLODED VIEW 1/1 30
MECHANICAL PARTS LIST 1/1 31

MODEL-NO. FD-NH9/NH90

PROTECTION OF EYES FROM LASER BEAM DURING SERVICING 32
ELECTRICAL MAIN PARTS LIST ..... 33~35
CHIP RESISTOR PART CODE 36
TRANSISTOR ILLUSTRATION 36
BLOCK DIAGRAM 37,38
WIRING-1(MAIN,DRIVE,T-T) 39,40
SCHEMATIC DIAGRAM-1(MAIN1/2,KEY1,KEY2,DECK,HEAD-1,HEAD-2) ..... 41~43
FL (7-ST-27G)GRID ASSIGNMENT/ANODE CONNECTION 44
WIRING-2(KEY1,KEY2,VIDEO2,DECK,HEAD-1,HEAD-2,LED) 45,46
SCHEMATIC DIAGRAM-2(MAIN2/2,DRIVE,T-T,LED) ..... 47~48
IC DESCRIPTION ..... 49~54
IC BLOCK DIAGRAM 55
TEST MODE 56
ELECTRICAL ADJUSTMENT(TAPE/CD) ..... 57~60
PRACTICAL SERVICE FIGURE(TAPE) 58
MECHANICAL EXPLODED VIEW 1/1 61
MECHANICAL PARTS LIST 1/1 62
TAPE MECHANISM EXPLODED VIEW 1/1 63,64
TAPE MECHANISM PARTS LIST 1/1 65
SPRING APPLICATION POSITION 66

MODEL-NO. SX-ANH9/ANH90

SPEAKER EXPLODED VIEW 1/1 67
SPEAKER PARTS LIST 67

ACCESSORIES / PACKAGE LIST 68
REFERENCE NAME LIST 69

SPECIFICATIONS

STEREO RECEIVER RX-NH9/NH90

FM tuner section

Tuning range	87.5 MHz to 108 MHz
Usable sensitivity (IHF)	13.2 dBf
Antenna terminals	75 ohms (unbalanced)

AM tuner section

Tuning range	530 kHz to 1710 kHz (10 kHz step) 531 kHz to 1602 kHz (9 kHz step)
Usable sensitivity	350 µV/m
Antenna	Loop antenna

Amplifier section

Power output	LH: 120 W+120 W (6 ohms, T.H.D.10 %, 1 kHz) HR, HE: Rated 95 W+95 W (6 ohms, T.H.D.1 %, 1 kHz) Reference: 120 W+120 W (6 ohms, T.H.D.10 %, 1 kHz) *without connecting to the SURROUND SPEAKERS U: 100 watts per channel, Min. RMS at 6 ohms, from 50 Hz to 20 kHz, *with no more than* 1 % Total Harmonic Distortion
Total harmonic distortion	0.1 % (60 W, 1 kHz, 6 ohms)
Inputs	VIDEO 1/MD IN: 200 mV (adjustable) VIDEO 2/AUX IN: 200 mV (adjustable) MIC 1, MIC 2: 1 mV (10 kohms)
Outputs	REC OUT: 200 mV SUPER WOOFER: LH: 2.6 V HR, HE, U: 2.4 V SPEAKERS: accept speakers of 6 ohms or more SURROUND SPEAKERS: accept speakers of 16 ohms or more PHONES (stereo jack): accepts headphones of 32 ohms or more

General

Power requirements	LH, HR, HE: 120 V/220-230 V/240 V AC, switchable 50/60 Hz U: 120 V AC, 60 Hz
Power consumption	130 W (System total 150 W)
Dimensions of main unit (W × H × D)	260×198×333.5 mm (10 1/4 × 7 7/8 × 13 1/4 in.)
Weight of main unit	LH, U: 5.8 kg (12 lbs 14 oz.) HR, HE: 6.5 kg

COMPACT DISC/STEREO CASSETTE DECK FD-NH9/NH90

Cassette deck section

Track format	4 tracks, 2 channels stereo
Frequency response	Metal tape: 50 Hz-17000 Hz CrO_2 tape: 50 Hz-16000 Hz Normal tape: 50 Hz-15000 Hz
Signal-to-noise ratio	LH, HR, HE: 70 dB (Dolby C NR ON, Metal tape peak level) U: 75 dB (Dolby C NR ON, Metal tape peak level)
Recording system	AC bias
Heads	Deck 1: Playback head × 1 Deck 2: Recording/playback/erase head × 1

Compact disc player section

Laser	Semiconductor laser (λ=780 nm)
D-A converter	1 bit dual
Signal-to-noise ratio	85 dB (1 kHz, 0 dB)
Harmonic distortion	0.03 % (1 kHz, 0 dB)
Wow and flutter	Unmeasurable
General	
Dimensions (W × H × D)	260 × 203 × 321.5 mm (10 1/4 × 8 × 12 3/4 in.)
Weight	3.9 kg (8 lbs 10 oz.)

Speaker system SX-ANH9/ANH90

Cabinet type	4 way, bass reflex with surround speaker (magnetic sealed type)
Speakers	Woofer: 140 mm (5 5/8 in.) cone type Mid-range: 80 mm (3 1/4 in.) cone type Tweeter: 50 mm (2 in.) cone type *Super tweeter:* 20 mm (13/16 in.) ceramic type Surround speaker: 80 mm (3 1/4 in.) cone type
Impedance	Front speaker: 6 ohms Surround speaker: 16 ohms
Output sound pressure level	LH, HR, HE: 87 dB/W/m U: 88 dB/W/m
Dimensions (W × H × D)	250 × 405 × 286 mm (9 7/8 × 16 × 11 3/8 in.)
Weight	5 kg (11 lbs)

- Design and specifications are subject to change without notice.
- Dolby noise reduction manufactured under license from Dolby Laboratories Licensing Corporation.
  "DOLBY" and the double-D symbol ⧈ are trademarks of Dolby Laboratories Licensing Corporation.
- The word "BBE" and the "BBE symbol" are trademarks of BBE Sound,Inc.
  Under license from BBE Sound,Inc.

MODEL NO.

RX-NH9/NH90

ELECTRICAL MAIN PARTS LIST

DESCRIPTIONで判断できない物は "REFERENCE NAME LIST" を参照してください。
If can't understand for Description please kindly refer to "REFERENCE NAME LIST".

REF. NO	PART NO.	ｶﾝﾘ NO.	DESCRIPTION
IC			
	87-A20-069-049		C-IC,BA3842F
	87-A20-067-040		C-IC,M65849FP
	87-A20-063-019		IC,STK-419-140<U>
	87-A20-191-019		IC,STK-419-140A<EXCEPT U>
	87-017-888-089		IC,NJM4558MD
	87-017-915-089		IC,BU4094BCF
	87-017-804-019		IC,BU4052BC
	87-A20-083-019		IC,BA3835S
	87-A20-107-019		IC,BA3836
	87-017-914-019		IC,BU4094 BC
	87-A20-056-019		IC,BA3880S
	87-070-127-119		IC,LC72131D
	87-017-714-119		IC,LA1836L
	86-NT1-618-010		IC,LC 866424V-5A62
	87-070-083-019		IC,GP1U281X
TRANSISTOR			
	89-213-702-019		TR,2SB1370E
	89-109-352-089		TR,2SA935Q
	87-026-610-089		TR, KTC3198GR
	89-332-665-089		TR,2SC3266GR
	89-337-221-389		C-TR,2SC3722K
	89-324-122-089		C-TR,2SC2412R
	89-110-372-089		C-TR,2SA1037R
	89-110-373-089		C-TR,2SA1037S
	87-026-210-089		C-TR,DTC144EK T147
	89-421-141-289		C-TR,2SD2114K,UV
	87-026-609-089		TR, KTA1266GR
	89-109-373-089		TR,2SA1037S
	89-112-965-089		TR,2SA1296GR
	87-026-228-089		C-TR DTA124EK
	89-113-187-089		TR,2SA1318TU
	89-406-555-089		TR,2SD655E
	89-333-266-089		C-TR,2SC3326B
	87-026-214-089		TR,DTA114YS
	87-026-211-089		C-TR,DTA144EK T147
	89-327-125-089		C-TR,2SC2712GR
	89-327-143-089		C-TR,2SC2714 (O)
	87-026-226-089		C-TR,DTA143EK
	89-505-434-589		C-FET,2SK543(4/5)
DIODE			
	87-A40-116-069		DIODE,RS403L-B-D-51
	87-A40-115-069		DIODE,SAD102
	87-070-274-089		DIODE,1N4003SEM
	87-020-027-089		C-DIODE,1SS184
	87-020-125-089		C-DIODE,1SS181
	87-020-465-089		DIODE,1SS133
	87-017-174-089		ZENER,HZS11A3L
	87-017-146-089		ZENER,HZS30-2
	87-001-290-089		ZENER,HZS5C1
	87-017-148-089		ZENER,HZS6A1L
	87-001-731-089		ZENER HZS6C2L
	87-001-911-089		ZENER,UTZJ4.7A (TAPG)
MAIN C.B			
C101	87-016-520-099		CAP E 3300-65<U>
C101	87-016-657-099		CAP,E 3300-71<EXCEPT U>
C102	87-016-520-099		CAP E 3300-65<U>
C102	87-016-657-099		CAP,E 3300-71<EXCEPT U>
C104	87-010-235-089		CAP,E 470-16 SME
C105	87-010-235-089		CAP,E 470-16 SME
C106	87-016-285-089		CAP,E 47-100 SME
C107	87-010-407-089		CAP,E 33-50 SME
C108	87-010-407-089		CAP,E 33-50 SME
C109	87-010-263-089		CAP,E 100-10 SME 5X11
C112	87-010-382-089		CAP,E 22-25 SME
C113	87-010-403-089		CAP,E 3.3-50 SME
C116	87-012-140-089		C-CAP,S 470P-50 CH
C121	87-012-368-089		C-CAP,S 0.1-50 F
C122	87-012-368-089		C-CAP,S 0.1-50 F
C123	87-012-368-089		C-CAP,S 0.1-50 F
C124	87-012-368-089		C-CAP,S 0.1-50 F
C125	87-010-263-089		CAP,E 100-10 SME 5X11
C126	87-010-197-089		C-CAP,S 0.01 B
C127	87-010-197-089		C-CAP,S 0.01 B
C131	87-010-186-089		C-CAP,S 4700P-50 B
C132	87-010-186-089		C-CAP,S 4700P-50 B
C152	87-010-260-089		CAP,E 47-25 SME
C171	87-016-658-099		CAP,E 4700-35V SME
C172	87-016-658-099		CAP,E 4700-35V SME
C173	87-012-368-089		C-CAP,S 0.1-50F
C174	87-012-368-089		C-CAP,S 0.1-50F
C175	87-012-368-089		C-CAP,S 0.1-50F
C176	87-012-368-089		C-CAP,S 0.1-50F
C220	87-010-194-089		C-CAP,S 0.047-25 F
C221	87-010-545-089		CAP,E 0.22-50 SME
C222	87-010-545-089		CAP,E 0.22-50 SME
C225	87-012-157-089		C-CAP,S 330P-50 CH
C226	87-012-157-089		C-CAP,S 330P-50 CH
C227	87-010-402-089		CAP,E 2.2-50 SME
C228	87-010-402-089		CAP,E 2.2-50 SME
C229	87-010-382-089		CAP,E 22-25 SME
C230	87-010-382-089		CAP,E 22-25 SME
C231	87-018-099-089		CAP,TC-U 3.9P-50 CH
C232	87-018-099-089		CAP,TC-U 3.9P-50 CH
C233	87-010-196-089		C-CAP,S 0.1-25 F
C234	87-010-196-089		C-CAP,S 0.1-25 F
C235	87-010-196-089		C-CAP,S 0.1-25 F
C236	87-010-196-089		C-CAP,S 0.1-25 F
C240	87-010-197-089		C-CAP,S 0.01-25 B
C245	87-012-368-089		C-CAP,S 0.1-50 F
C500	87-010-405-089		CAP,E 10-50 SME
C501	87-010-213-089		C-CAP,S 0.015-25 B<HEJ,HRJ>
C501	87-010-198-089		C-CAP,S 0.022-25 B<LH,U>
C502	87-010-213-089		C-CAP,S 0.015-25 B<HEJ,HRJ>
C502	87-010-198-089		C-CAP,S 0.022-25 B<LH,U>
C503	87-010-179-089		C-CAP,S 1200P-50 B<HEJ,HRJ>
C503	87-010-183-089		C-RES,S 2700P-50 B<LH,U>
C504	87-010-179-089		C-CAP,S 1200P-50 B<HEJ,HRJ>
C504	87-010-183-089		C-RES,S 2700P-50 B<LH,U>
C505	87-010-546-089		CAP,E 0.33-50 SME
C506	87-010-546-089		CAP,E 0.33-50 SME
C507	87-010-196-089		C-CAP,S 0.1-25 F
C508	87-010-196-089		C-CAP,S 0.1-25 F
C530	87-010-197-089		C-CAP,S 0.01-25 B
C531	87-010-183-089		C-CAP,S 2700P-50 B
C532	87-010-194-089		C-CAP,S 0.047-25 F
C533	87-010-196-089		C-CAP,S 0.1-25 F
C534	87-010-263-089		CAP,E 100-10 SME 5X11
C535	87-010-404-089		CAP,E 4.7-50 SME
C536	87-010-404-089		CAP,E 4.7-50 SME
C537	87-010-545-089		CAP,E 0.22-50 SME
C539	87-010-194-089		C-CAP,S 0.047-25 F

REF. NO	PART NO.	カンリ NO.	DESCRIPTION
C540	87-010-384-089		CAP,E 100-25 SME
C541	87-010-404-089		CAP,E 4.7-50 SME
C542	87-010-404-089		CAP,E 4.7-50 SME
C560	87-012-156-089		C-CAP,S 220P-50 CH
C561	87-012-156-089		C-CAP,S 220P-50 CH
C562	87-012-156-089		C-CAP,S 220P-50 CH
C563	87-012-142-089		C-CAP,S 0.33-16 F
C564	87-010-196-089		C-CAP,S 0.1-25 F
C565	87-018-209-089		CAP,TC-U 0.1-50 F
C566	87-010-196-089		C-CAP,S 0.1-25 F
C601	87-010-184-089		C-CAP,S 3300P-50 B
C602	87-010-184-089		C-CAP,S 3300P-50 B
C603	87-010-405-089		CAP,E 10-50 SME
C604	87-010-405-089		CAP,E 10-50 SME
C605	87-010-260-089		CAP,E 47-25 SME
C606	87-010-101-089		CAP,E 220-16 SME
C607	87-010-188-089		C-CAP,S 6800P-50 B
C608	87-010-188-089		C-CAP,S 6800P-50 B
C609	87-018-127-089		CAP,TC-U 470P-50 B
C610	87-018-127-089		CAP,TC-U 470P-50 B
C611	87-010-197-089		C-CAP,S 0.01-25 B
C612	87-010-197-089		C-CAP,S 0.01-25 B
C613	87-010-195-089		C-CAP,S 0.068-25 F
C614	87-010-195-089		C-CAP,S 0.068-25 F
C615	87-010-404-089		CAP,E 4.7-50 SME
C616	87-010-404-089		CAP,E 4.7-50 SME
C617	87-010-404-089		CAP,E 4.7-50 SME
C618	87-010-404-089		CAP,E 4.7-50 SME
C701	87-010-381-089		CAP,E 330-16 SME
C702	87-010-404-089		CAP,E 4.7-50 SME
C703	87-010-197-089		C-CAP,S 0.01-25 B
C704	87-010-197-089		C-CAP,S 0.01-25 B
C711	87-010-263-089		CAP,E 100-10 SME 5X11
C712	87-010-196-089		C-CAP,S 0.1-25 F
C715	87-010-197-089		C-CAP,S 0.01-25 B
C716	87-010-197-089		C-CAP,S 0.01-25 B
C722	87-010-152-089		C-CAP,S 8P-50 CH
C723	87-010-178-089		C-CAP,S 1000P-50 B
C725	87-010-178-089		C-CAP,S 1000P-50 B
C727	87-010-196-089		C-CAP,S 0.1-25 F
C728	87-010-248-089		CAP,E 220-10 SME
C760	87-010-197-089		C-CAP,S 0.01-25 B
C761	87-010-196-089		C-CAP,S 0.1-25 F
C770	87-010-405-089		CAP,E 10-50 SME
C771	87-010-405-089		CAP,E 10-50 SME
C772	87-010-194-089		C-CAP,S 0.047-25 F
C773	87-010-196-089		C-CAP,S 0.1-25 F
C774	87-010-263-089		CAP,E 100-10 SME 5X11
C775	87-010-405-089		CAP,E 10-50 SME
C776	87-010-197-089		C-CAP,S 0.01-25 B
C777	87-010-400-089		CAP,E 0.47-50 SME
C778	87-010-401-089		CAP,E 1-50 SME
C779	87-010-401-089		CAP,E 1-50 SME
C780	87-010-197-089		C-CAP,S 0.01-25 B
C781	87-010-405-089		CAP,E 10-50 SME
C782	87-010-405-089		CAP,E 10-50 SME
C787	87-010-184-089		C-CAP,S 3300P-50 B
C788	87-010-184-089		C-CAP,S 3300P-50 B
C789	87-010-179-089		C-CAP,S 1200P-50 B
C790	87-010-179-089		C-CAP,S 1200P-50 B
C791	87-010-401-089		CAP,E 1-50 SME
C792	87-010-180-089		C-CAP,S 1500P-50 B
C793	87-010-189-089		C-CAP,S 8200P-50 B
C794	87-010-408-089		CAP,E 47-50 SME
C795	87-010-194-089		C-CAP,S 0.047-25 F
C796	87-010-403-089		CAP,E 3.3-50 SME
C801	87-018-134-089		CAP,TC-U0.01-16 Y
C802	87-018-134-089		CAP,TC-U0.01-16 Y
C813	87-018-134-089		CAP,TC-U0.01-16 Y
C814	87-010-197-089		C-CAP,S 0.01-25 B
C815	87-018-134-089		CAP,TC-U 0.01-16 Y
C816	87-018-134-089		CAP,TC-U 0.01-16 Y
C817	87-010-197-089		C-CAP,S 0.01-25 B
C818	87-010-197-089		C-CAP,S 0.01-25 B
C819	87-010-197-089		C-CAP,S 0.01-25 B
C820	87-010-408-089		CAP,E 47-50 SME
C821	87-010-197-089		C-CAP,S 0.01-25 B
C822	87-010-197-089		C-CAP,S 0.01-25 B
C823	87-010-197-089		C-CAP,S 0.01-25 B
C828	87-010-196-089		C-CAP,S 0.1-25 F
C829	87-010-196-089		C-CAP,S 0.1-25 F
C940	87-010-197-089		C-CAP,S 0.01-25 B
C946	87-010-401-089		CAP,E 1-50 SME
C960	87-010-196-089		C-CAP,S 0.1-25 F
C961	87-010-152-089		C-CAP,S 8P-50 CH
CF801	87-008-261-019		FLTR,SFE10.7MA5-A
CF802	87-008-261-019		FLTR,SFE10.7MA5-A
FFE801	A8-6ZA-190-039		6ZA-1FEUNM
J252	87-A60-020-019		JACK,6.3 BLK W/SW
J253	87-099-802-019		JACK,PIN 3P BRW
J253	87-099-802-019		JACK,PIN 3P BRW
J254	87-033-240-019		TERMINAL,SP 4P32SV1-05
J254	87-033-240-019		TERMINAL,SP 4P32SV1-05
J801	87-033-235-019		TERMINAL,ANT (H)
L101	87-003-383-019		COIL,1UH-S
L102	87-003-383-019		COIL,1UH-S
L701	87-003-293-019		COIL,TRAP MPX
L702	87-003-293-019		COIL,TRAP MPX
L741	87-A50-015-019		COIL,FM DET(TOK)
L742	87-A90-051-019		FLTR,CFAZ-450(TOK)
L770	87-003-102-089		COIL,10UH
L832	87-003-098-089		COIL,2.2UH
L981	86-NF4-665-019		AM PACK 1(TOK)
R105	87-022-600-089		RES,M/F 0.1-2W J
R106	87-022-600-089		RES,M/F 0.1-2W J
RY101	87-045-389-019		RELAY,OSA-SS-212DM5
RY102	87-045-382-019		RELAY,OUAZ-SH-112L
SFR722	87-024-352-089		SFR,4.7K DIA6 H
TC701	87-011-253-089		TRIMER,30P LAR
W304	87-064-142-019		HOLD WIRE 15-1.5
X703	84-508-618-019		VIB,CER CSB 456 F15
X721	87-030-372-019		VIB,XTAL 7.2MHZ

FRONT C.B

C101	87-010-401-049		CAP,E 1-50 SME
C102	87-010-401-049		CAP,E 1-50 SME
C103	87-010-182-089		C-CAP,S 2200P-50 B
C104	87-010-182-089		C-CAP,S 2200P-50 B
C105	87-010-545-049		CAP E 0.22-50 SME
C106	87-010-545-049		CAP E 0.22-50 SME
C107	87-010-993-089		C-CAP,S 0.056-25 B
C108	87-010-993-089		C-CAP,S 0.056-25 B
C109	87-012-393-089		C-CAP,S 0.22-16,R,X
C110	87-012-393-089		C-CAP,S 0.22-16,R,X
C111	87-010-401-049		CAP,E 1-50 SME
C112	87-010-260-049		CAP,E 47-25 SME
C113	87-010-405-049		CAP,E 10-50 SME

REF. NO	PART NO.	カンリ NO.	DESCRIPTION
C114	87-010-406-049		CAP,E 22-50 SME
C115	87-010-196-089		C-CAP,S 0.1-25 F
C401	87-010-196-089		C-CAP,S 0.1-25 F
C402	87-010-196-089		C-CAP,S 0.1-25 F
C450	87-010-112-049		CAP,E 100-16
C470	87-010-112-049		CAP,E 100-16
C501	87-010-322-089		C-CAP,S 100P-50 CH
C502	87-010-196-089		C-CAP,S 0.1-25 F
C503	87-010-196-089		C-CAP,S 0.1-25 F
C504	87-010-196-089		C-CAP,S 0.1-25 F
C505	87-010-196-089		C-CAP,S 0.1-25 F
C506	87-010-196-089		C-CAP,S 0.1-25 F
C601	87-010-196-089		C-CAP,S 0.1-25 F
C602	87-010-545-049		CAP E 0.22-50 SME
C603	87-010-321-089		C-CAP,S 82P-50 CH
C604	87-010-196-089		C-CAP,S 0.1-25 F
C605	87-010-196-089		C-CAP,S 0.1-25 F
C608	87-010-177-089		C-CAP,S 820P-50 SL
C609	87-016-251-049		CAP,E220-16 SMG
C610	87-010-405-049		CAP,E 10-50 SME
C611	87-010-405-049		CAP,E 10-50 SME
C612	87-010-406-049		CAP,E 22-50 SME
C613	87-010-401-049		CAP,E 1-50 SME
C615	87-010-186-089		C-CAP,S 4700P-50 B
C801	87-010-555-049		CAP,E 100-10 GAS
C802	87-010-074-080		CAP,E 4.7-35 5L
C803	87-010-494-049		CAP,E 1-50 GAS
C804	87-A10-189-049		CAP,E 220-10
C805	87-010-196-089		C-CAP,S 0.1-25 F
C806	87-010-196-089		C-CAP,S 0.1-25 F
C821	87-010-312-089		C-CAP,S 15P-50 CH
C822	87-010-180-089		C-CAP,S 1500P-50 B
C823	87-010-498-049		CAP,E 10-16 GAS
C824	87-010-302-080		C-CAP,S 270P-50 CH
C825	87-010-322-089		C-CAP,S 100P-50 CH
C901	87-010-405-049		CAP,E 10-50 SME
C902	87-010-405-049		CAP,E 10-50 SME
C903	87-010-408-049		CAP-E 47-50 SME
FC001	88-904-201-219		FF-CABLE 4P 1.25
FL801	86-NT1-636-019		FL,BJ451GK
J601	82-NF7-630-019		JACK,3.5 MO
J602	82-NF7-630-019		JACK,3.5 MO
L801	87-005-165-089		COIL,1uH MLAL03<U>
L820	87-A50-052-019		COIL,CLOCK 5.76MHZ T1
LED401	87-070-199-089		LED,SLP738F-81-S-T1
LED402	87-070-199-089		LED,SLP738F-81-S-T1
LED403	87-070-199-089		LED,SLP738F-81-S-T1
LED404	87-070-199-089		LED,SLP738F-81-S-T1
LED405	87-070-199-089		LED,SLP738F-81-S-T1
LED406	87-070-199-089		LED,SLP738F-81-S-T1
LED407	87-070-199-089		LED,SLP738F-81-S-T1
LED408	87-070-199-089		LED,SLP738F-81-S-T1
LED409	87-070-199-089		LED,SLP738F-81-S-T1
LED410	87-070-199-089		LED,SLP738F-81-S-T1
LED411	87-070-201-089		LED,SLP9118C-51-S-T1
LED412	87-070-201-089		LED,SLP9118C-51-S-T1
LED413	87-070-201-089		LED,SLP9118C-51-S-T1
LED414	87-070-201-089		LED,SLP9118C-51-S-T1
LED415	87-070-201-089		LED,SLP9118C-51-S-T1
LED421	87-070-198-089		LED,SLP736A-81-S-T1
LED422	87-070-198-089		LED,SLP736A-81-S-T1
LED423	87-070-198-089		LED,SLP736A-81-S-T1
LED424	87-070-198-089		LED,SLP736A-81-S-T1
LED425	87-070-198-089		LED,SLP736A-81-S-T1
LED431	87-070-198-089		LED,SLP736A-81-S-T1
LED432	87-070-198-089		LED,SLP736A-81-S-T1
LED433	87-070-198-089		LED,SLP736A-81-S-T1
LED434	87-070-198-089		LED,SLP736A-81-S-T1
LED435	87-070-198-089		LED,SLP736A-81-S-T1
LED436	87-A40-188-089		LED,SLZ736A-17-S-T2
LED437	87-A40-188-089		LED,SLZ736A-17-S-T2
S920	87-A90-095-089		SW,TACT EVQ11G04M
S921	87-A90-095-089		SW,TACT EVQ11G04M
S922	87-A90-095-089		SW,TACT EVQ11G04M
S923	87-A90-095-089		SW,TACT EVQ11G04M
S924	87-A90-095-089		SW,TACT EVQ11G04M
S925	87-A90-095-089		SW,TACT EVQ11G04M
S926	87-A90-095-089		SW,TACT EVQ11G04M
S927	87-A90-095-089		SW,TACT EVQ11G04M
S928	87-A90-095-089		SW,TACT EVQ11G04M
S932	87-A90-095-089		SW,TACT EVQ11G04M
S933	87-A90-095-089		SW,TACT EVQ11G04M
S934	87-A90-095-089		SW,TACT EVQ11G04M
S935	87-A90-095-089		SW,TACT EVQ11G04M
S936	87-A90-095-089		SW,TACT EVQ11G04M
VR101	83-SP2-612-019		VR,10KB SQ11
VR601	87-A90-124-019		VR,RTRY 10KA L20

MVR C.B

C201	87-010-405-089		CAP,E 10-50 SME
C202	87-010-405-089		CAP,E 10-50 SME
C203	87-010-404-089		CAP,E 4.7-50 SME
C204	87-010-404-089		CAP,E 4.7-50 SME
C205	87-010-263-089		CAP,E 100-10 SME 5X11
C206	87-010-263-089		CAP,E 100-10 SME 5X11
C207	87-010-318-089		C-CAP,S 47P-50 CH
C208	87-010-318-089		C-CAP,S 47P-50 CH
C209	87-016-461-089		C-CAP,S 0.47-25 F
C210	87-010-197-089		C-CAP,S 0.01-25 B
C211	87-010-179-089		C-CAP,S 1200P-50 B
C212	87-010-196-089		C-CAP,S 0.1-25 F
C213	88-707-789-819		CAP, M 0.33-50 J TF
C214	88-707-789-819		CAP, M 0.33-50 J TF
C215	87-010-196-089		C-CAP,S 0.1-25 F
C216	87-010-187-089		C-CAP,S 5600P-50 B
C217	87-010-182-089		C-CAP,S 2200P-50 B
C218	87-012-393-089		C-CAP,S 0.22-16,R,K
C219	87-010-194-089		C-CAP,S 0.047-25 F
C220	87-010-182-089		C-CAP,S 2200P-50 B
C221	87-010-196-089		C-CAP,S 0.1-25 F
C222	87-010-179-089		C-CAP,S 1200P-50 B
C223	87-010-177-089		C-CAP,S 820P-50 SL
C280	87-010-196-089		C-CAP,S 0.1-25 F
C285	87-010-263-089		CAP,E 100-10 SME 5X11
C286	87-010-384-089		CAP,E 100-25 SME
C301	87-010-402-049		CAP,E 2.2-50 SME
C302	87-010-402-049		CAP,E 2.2-50 SME
C303	87-010-404-049		CAP,E 4.7-50 SME
C304	87-010-404-049		CAP,E 4.7-50 SME
L201	87-005-481-089		COIL,47UH J FLR50
MVR281	86-NT1-633-019		VR,MOT 50KBX2 -L20

TRAY C.B

S937	87-A90-095-089		SW,TACT EVQ11G04M
S938	87-A90-095-089		SW,TACT EVQ11G04M
S939	87-A90-095-089		SW,TACT EVQ11G04M

REF. NO	PART NO.	カンリ NO.	DESCRIPTION
S940	87-A90-095-089		SW,TACT EVQ11G04M
S941	87-A90-095-089		SW,TACT EVQ11G04M
S942	87-A90-095-089		SW,TACT EVQ11G04M
S945	87-036-110-019		SW,PUSH SPPB 62
S946	87-A90-095-089		SW,TACT EVQ11G04M
S947	87-A90-095-089		SW,TACT EVQ11G04M
S948	87-A90-095-089		SW,TACT EVQ11G04M
S949	87-A90-095-089		SW,TACT EVQ11G04M
S950	87-A90-095-089		SW,TACT EVQ11G04M
S951	87-A90-095-089		SW,TACT EVQ11G04M
S952	87-A90-095-089		SW,TACT EVQ11G04M
S953	87-A90-095-089		SW,TACT EVQ11G04M
S954	87-A90-095-089		SW,TACT EVQ11G04M
S955	87-036-110-019		SW,PUSH SPPB 62

AC-2 C.B

⚠PR101	87-A90-210-089		PROTECTOR 7A125V251<U>
⚠PR101	87-A90-195-089		PROTECTOR 7A125V491<EXCEPT U>
⚠PR102	87-A90-210-089		PROTECTOR 7A125V251<U>
⚠PR102	87-A90-195-089		PROTECTOR 7A125V491<EXCEPT U>

REF. NO	PART NO.	カンリ NO.	DESCRIPTION

AC-1 C.B<U>

⚠	87-033-213-089		CLAMP FUSE SMK<U>
⚠	82-304-743-019		TERMINAL 1P<U>
⚠F101	87-035-192-019		FUSE,4A 250V<U>
⚠PT103	86-NT1-607-019		PT,6NT1-U<U>

PT-H C.B<EXCEPT U>

⚠	82-304-743-019		TERMINAL 1P<EXCEPT U>
⚠F101	87-035-192-019		FUSE,4A 250V<EXCEPT U>
⚠PT103	86-NT1-606-019		PT,6NT1-HR<HEJ,HRJ>
⚠PT103	86-NT1-609-019		PT,6NT1-LH<LH>
⚠SW101	87-036-387-019		SW,SL 1-2-3<EXCEPT U>

MOTOR C.B

C970	87-010-263-089		CAP,E 100-10 SME 5X11
C971	87-010-263-089		CAP,E 100-10 SME 5X11

○ チップ抵抗部品コード／CHIP RESISTOR PART CODE

チップ抵抗部品コードの成り立ち
Chip Resistor Part Coding

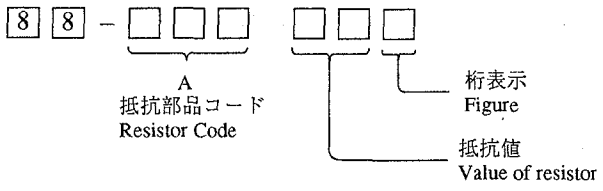

チップ抵抗
Chip resistor

容量 Wattage	種類 Type	許容誤差 Tolerance	記号 Symbol	寸法／Dimensions (mm) 外形／Form	L	W	t	抵抗コード：A Resistor Code: A
1／16W	1608	±5%	CJ	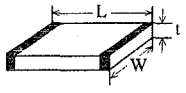	1.6	0.8	0.45	108
1／10W	2125	±5%	CJ		2	1.25	0.45	118
1／8W	3216	±5%	CJ		3.2	1.6	0.55	128

TRANSISTOR ILLUSTRATION

2SA1296
2SA1318
2SC3266
2SD655
KTA1266
KTC3198

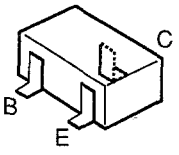

2SA1037
2SC2412
2SC2712
2SC2714
2SC3326
2SC3722
2SD2114
DTA124EK
DTA143EK
DTA144EK
DTC144EK

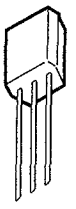

DTA114YS

2SA935

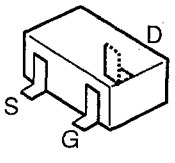

2SK543

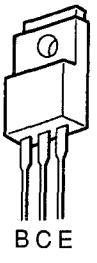

2SB1370

BLOCK DIAGRAM

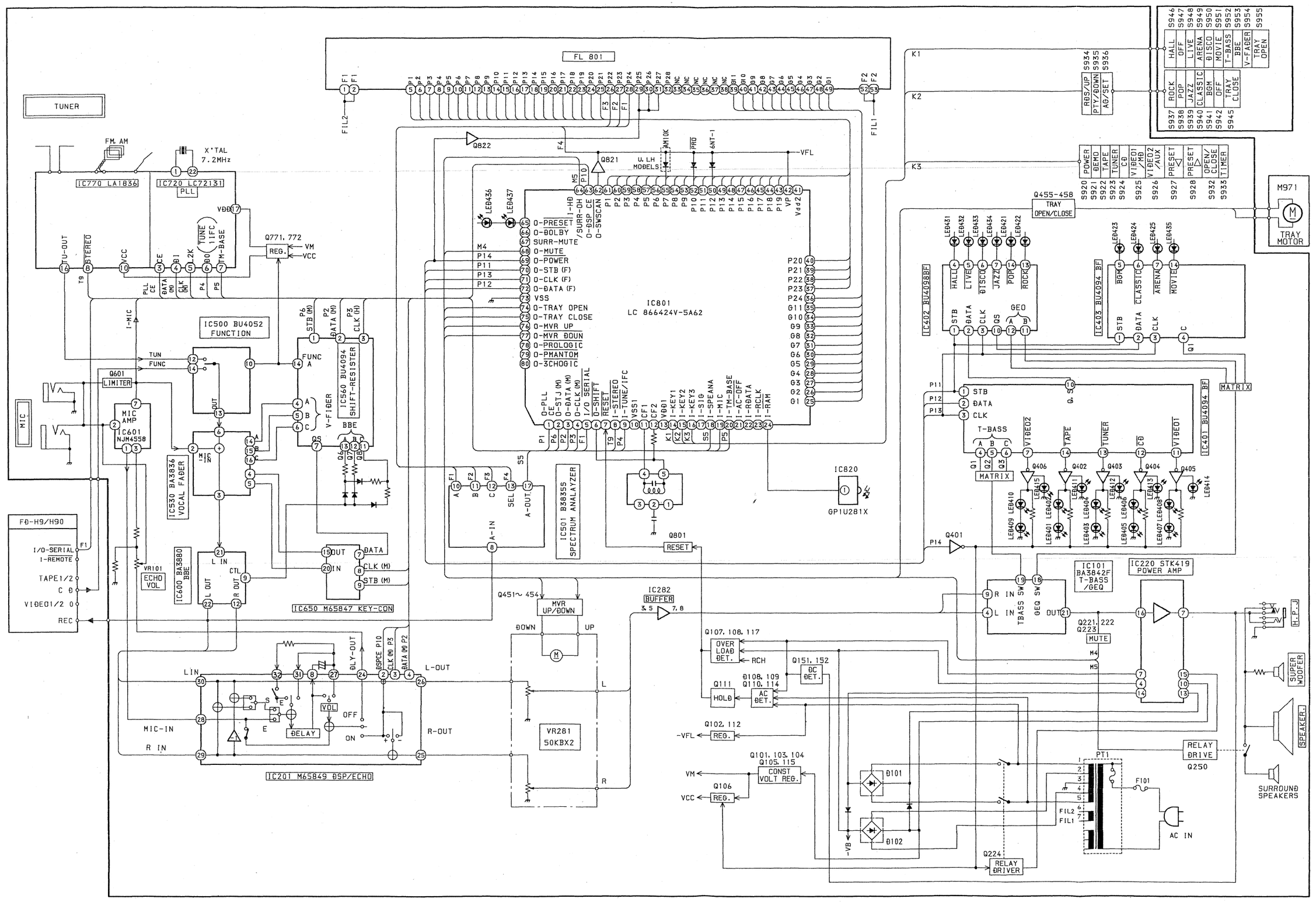

A MAIN C.B

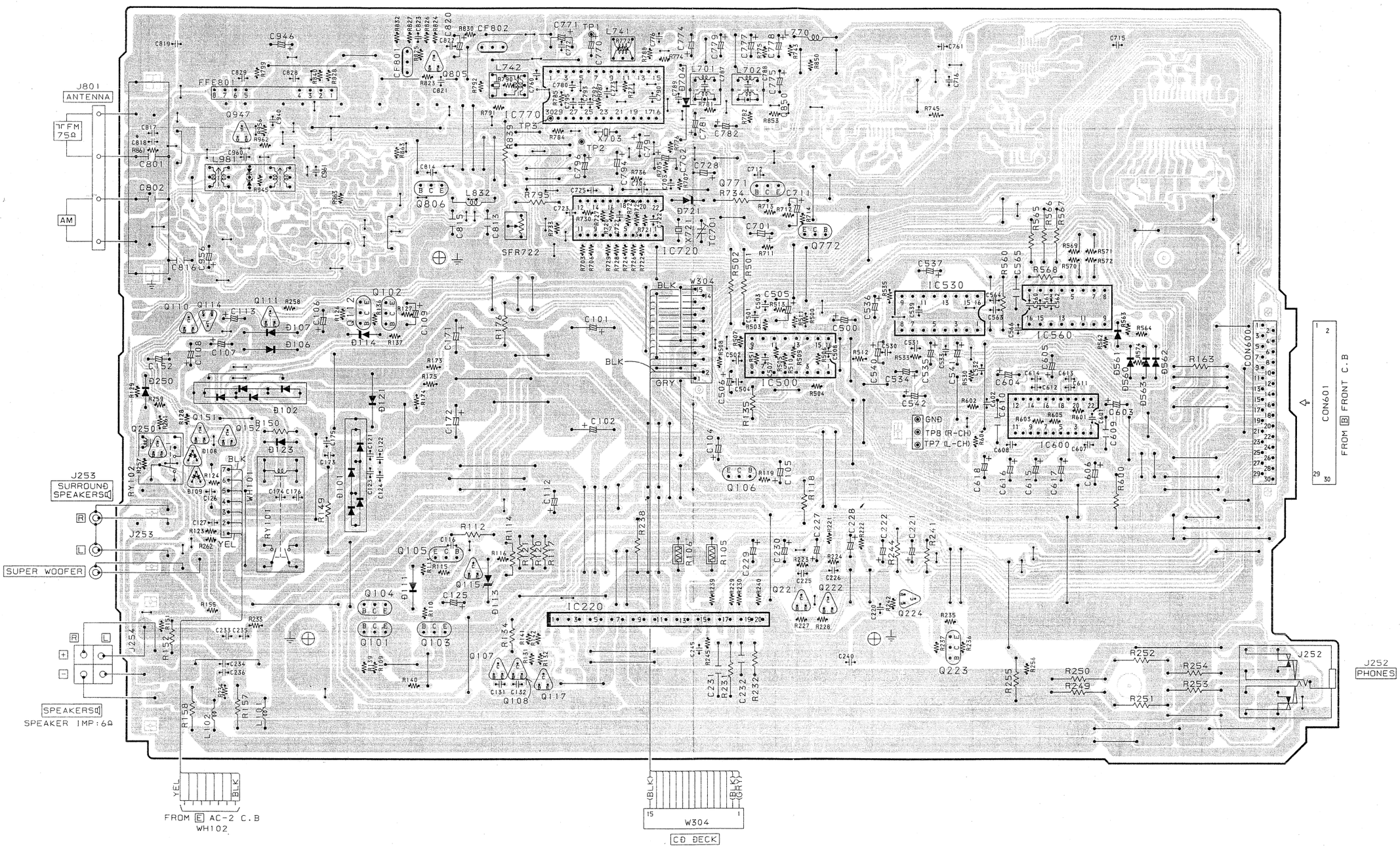
J801
ANTENNA
FM 75Ω
AM
J253
SURROUND SPEAKERS
R
L
SUPER WOOFER
J254
SPEAKERS
SPEAKER IMP:6Ω
FROM E AC-2 C.B
WH102
YEL
BLK
W304
CD DECK
BLK
GRY
GND
TP8 (R-CH)
TP7 (L-CH)
CON601
FROM B FRONT C.B
J252
PHONES
IC770
IC720
IC500
IC530
IC560
IC600
IC220
Q771
Q772
Q947
Q806
Q805
Q102
Q106
Q105
Q104
Q101
Q103
Q107
Q108
Q117
Q221
Q222
Q223
Q224
L742
L741
L701
L702
L832
SFR722
X703
X721
TC701
D721
D704
D102
D106
D107
D114
D121
D123
D250
D560
D561
D562
D563
CF801
CF802
FFE801
RY101
W101
W304
BLK
YEL

SCHEMATIC DIAGRAM-1 (MAIN)

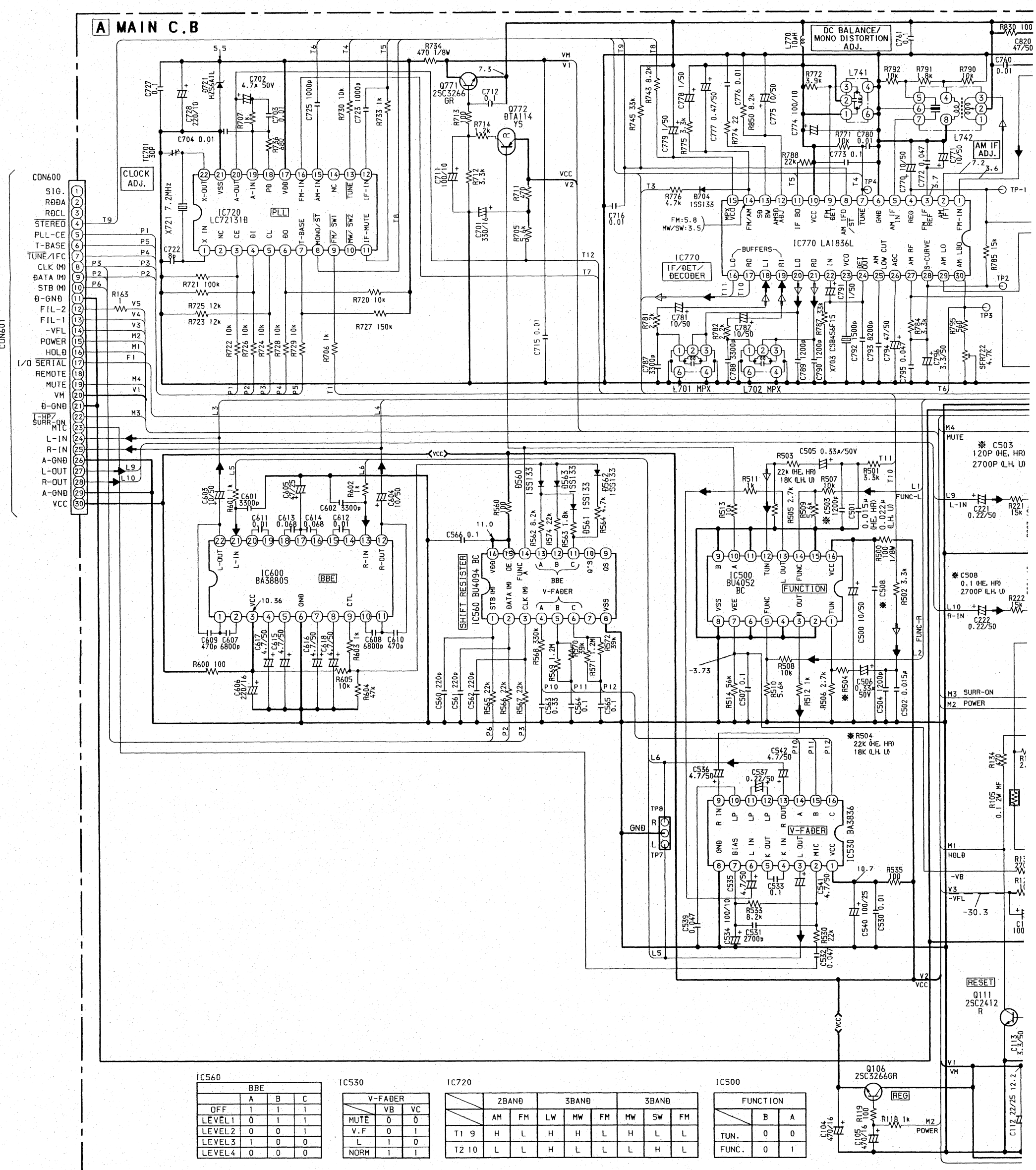

IC560

BBE			
	A	B	C
OFF	1	1	1
LEVEL1	0	1	1
LEVEL2	0	0	1
LEVEL3	1	0	0
LEVEL4	0	0	0

IC530

V-FAØER		
	VB	VC
MUTE	0	0
V.F	0	1
L	1	0
NORM	1	1

IC720

	2BANØ		3BANØ			3BANØ		
	AM	FM	LW	MW	FM	MW	SW	FM
T1 9	H	L	H	H	L	H	L	L
T2 10	L	L	H	L	L	L	H	L

IC500

FUNCTION		
	B	A
TUN.	0	0
FUNC.	0	1

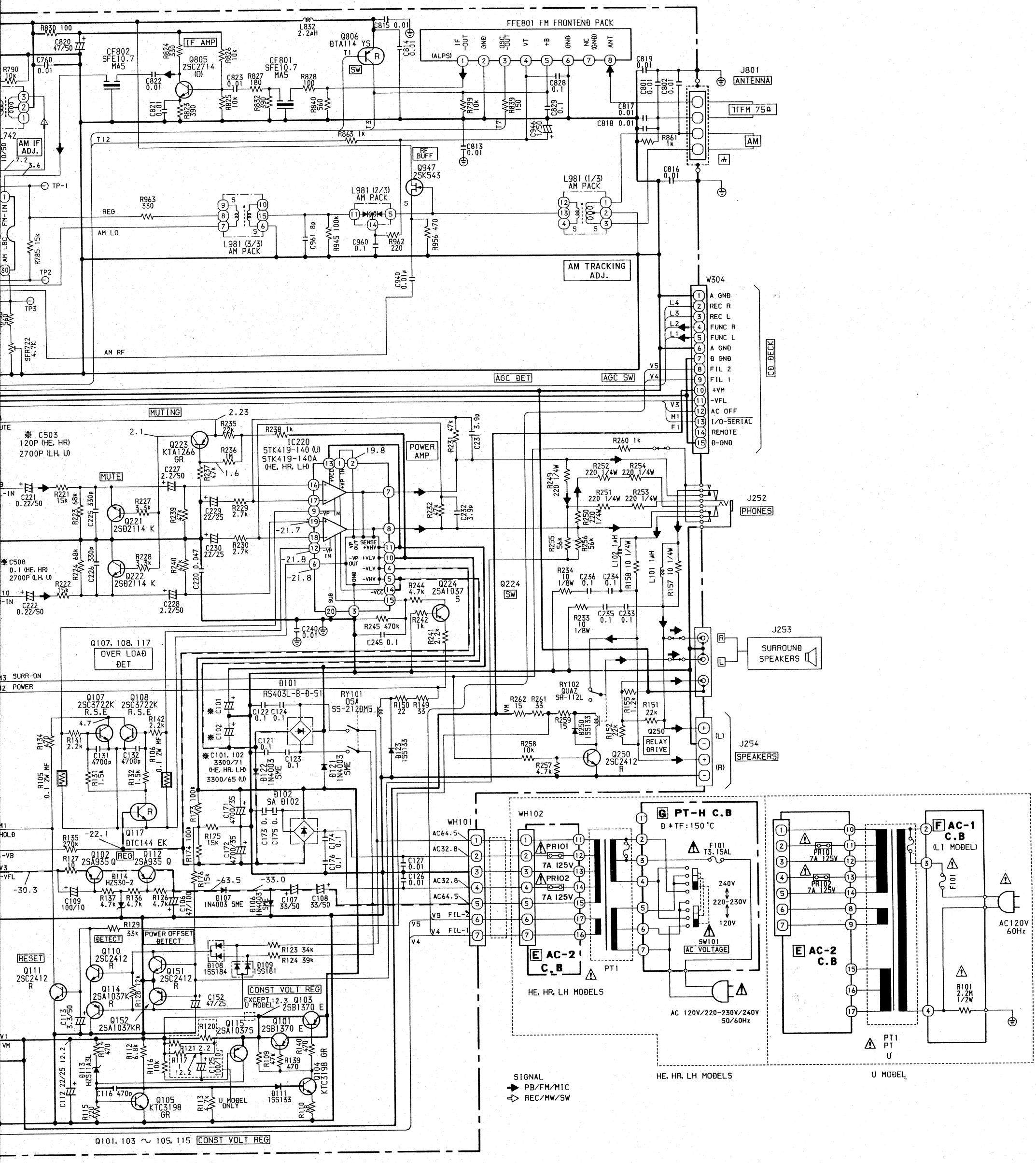
FFE801 FM FRONTEND PACK
IF -OUT
GND
OSC -OUT
VT
+B
GND
NC (GND)
ANT
(ALPS)
IF AMP
POWER AMP
MUTING
MUTE
AM IF ADJ.
RF BUFF
AM TRACKING ADJ.
AM RF
AGC DET
AGC SW
OVER LOAD DET
POWER OFFSET DETECT
CONST VOLT REG
RELAY DRIVE
Q224 SW
J801 ANTENNA
J252 PHONES
J253 SURROUND SPEAKERS
J254 SPEAKERS
CD DECK
W304
A GND
REC R
REC L
FUNC R
FUNC L
A GND
D GND
FIL 2
FIL 1
+VM
-VFL
AC OFF
I/O-SERIAL
REMOTE
D-GND
SURR-ON
POWER
REG
AM LO
RESET
SW101 AC VOLTAGE
240V
220-230V
120V
AC120V 60Hz
G PT-H C.B
F AC-1 C.B
E AC-2 C.B
HE, HR, LH MODELS
U MODEL
AC 120V/220-230V/240V 50/60Hz
SIGNAL
PB/FM/MIC
REC/MW/SW

FL (BJ451GK) GRID ASSIGNMENT ／ ANODE CONNECTION

GRID ASSIGNMENT

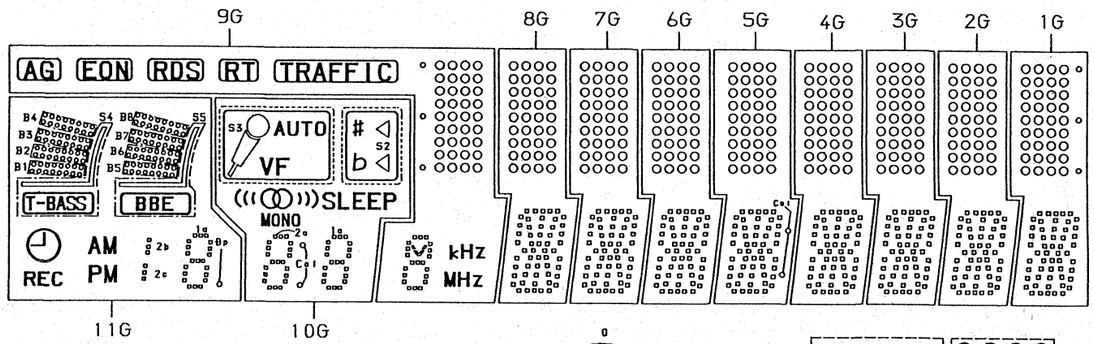

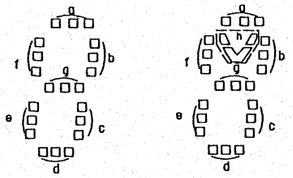

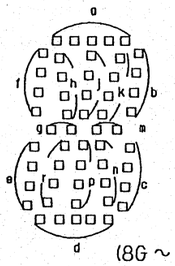

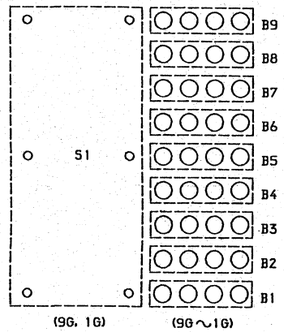

ANODE CONNECTION

	11G	10G	9G	8G	7G	6G	5G	4G	3G	2G	1G
P1	2b, 2c	S3	B9	B9	B9	B9	B9	B9	B9	B9	B9
P2	1a	AUTO	B8	B8	B8	B8	B8	B8	B8	B8	B8
P3	1b	◁(High)	B7	B7	B7	B7	B7	B7	B7	B7	B7
P4	1f	◁(Low)	B6	B6	B6	B6	B6	B6	B6	B6	B6
P5	1g	((( )))	B5	B5	B5	B5	B5	B5	B5	B5	B5
P6	1c	SLEEP	B4	B4	B4	B4	B4	B4	B4	B4	B4
P7	1e	MONO	B3	B3	B3	B3	B3	B3	B3	B3	B3
P8	1d	○	B2	B2	B2	B2	B2	B2	B2	B2	B2
P9	–	2a	B1	B1	B1	B1	B1	B1	B1	B1	B1
P10	–	2b	TRAFFIC	a	a	a	a	a	a	a	a
P11	B8	2f	R T	h	h	h	h	h	h	h	h
P12	B7	2g	RDS	j	j	j	j	j	j	j	j
P13	B6	2c	EON	k	k	k	k	k	k	k	k
P14	B5	2e	A G	b	b	b	b	b	b	b	b
P15	B4	2d	h	f	f	f	f	f	f	f	f
P16	B3	1a	a	m	m	m	m	m	m	m	m
P17	B2	1b	b	g	g	g	g	g	g	g	g
P18	B1	1f	f	c	c	c	c	c	c	c	c
P19	AM	1g	g	e	e	e	e	e	e	e	e
P20	PM	1c	c	r	r	r	r	r	r	r	r
P21	◴	1e	e	p	p	p	p	p	p	p	p
P22	REC	1d	d	n	n	n	n	n	n	n	n
P23	–	Col (Low)	KHz	d	d	d	d	d	d	d	d
P24	Dp	Col (High)	MHz	–	–	–	col	–	–	–	–
P25	–	–	S1	–	–	–	–	–	–	–	S1
P26	S4	–	–	–	–	–	–	–	–	–	–
P27	S5	–	–	–	–	–	–	–	–	–	–
P28	–	S2	–	–	–	–	–	–	–	–	–

WIRING-2 (FRONT)

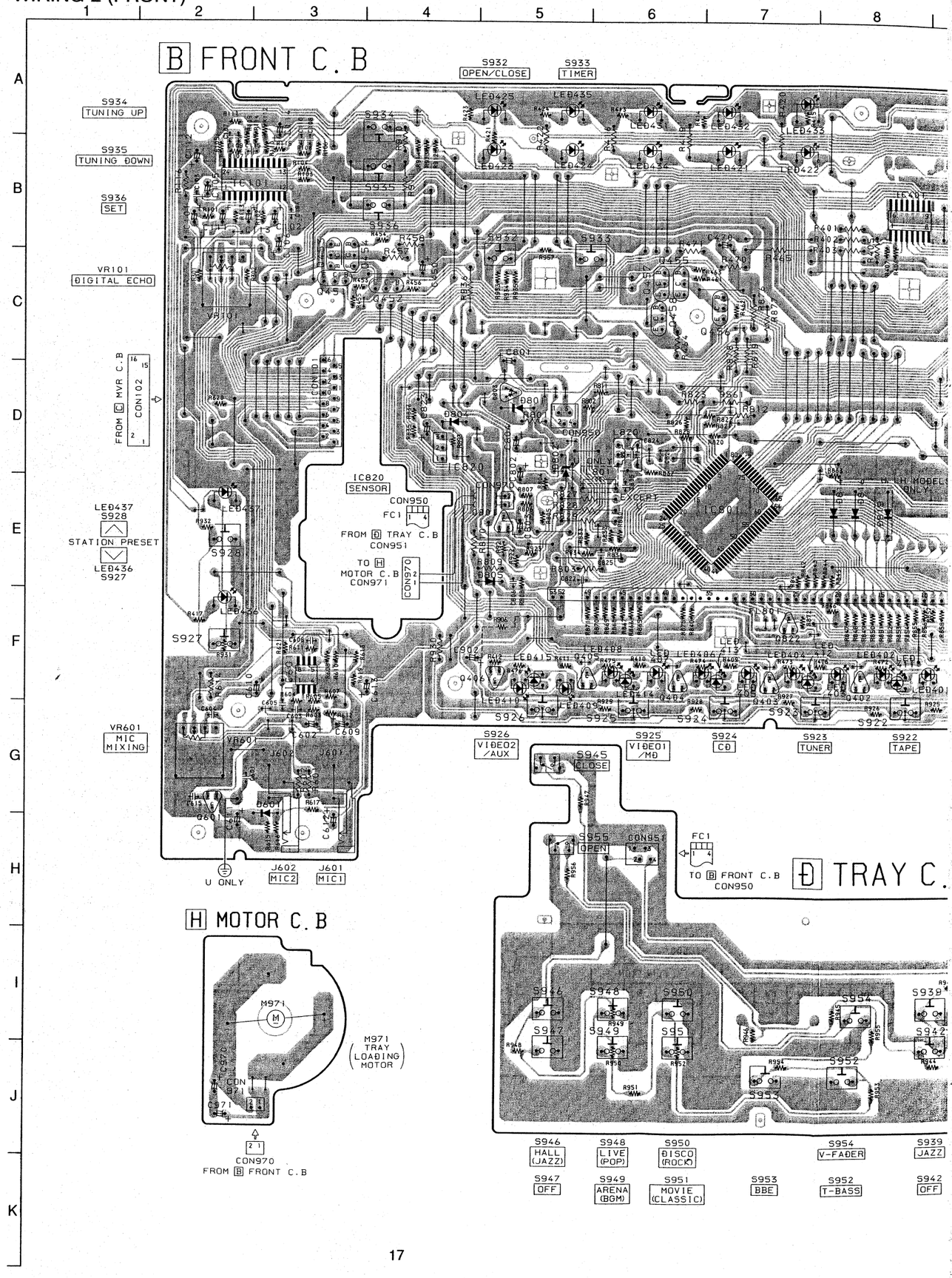

2G
1G
B9
B8
B7
B6
B5
B4
B3
B2
B1
(9G~1G)

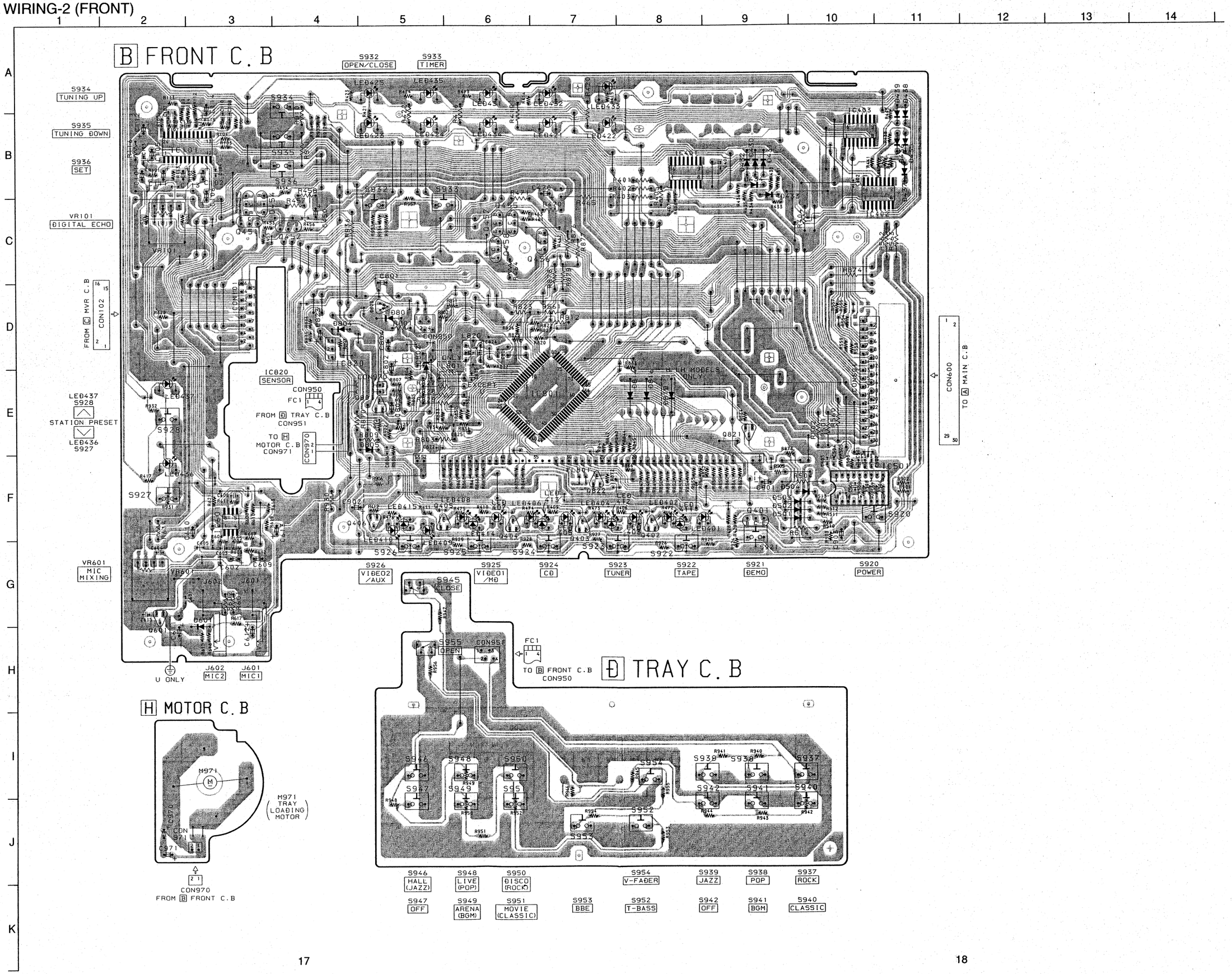
B FRONT C.B
S932 OPEN/CLOSE
S933 TIMER
S934 TUNING UP
S935 TUNING DOWN
S936 SET
VR101 DIGITAL ECHO
FROM C MVR C.B
CON102
LED437 S928 STATION PRESET
LED436 S927
IC820 SENSOR
CON950
FC1
FROM D TRAY C.B CON951
TO H MOTOR C.B CON971
CON970
H LH MODELS ONLY
CON600
TO A MAIN C.B
VR601 MIC MIXING
U ONLY
J602 MIC2
J601 MIC1
S926 VIDEO2 /AUX
S925 VIDEO1 /MD
S924 CD
S923 TUNER
S922 TAPE
S921 DEMO
S920 POWER
S945 CLOSE
S955 OPEN
CON951
TO B FRONT C.B CON950
D TRAY C.B
H MOTOR C.B
M971 TRAY LOADING MOTOR
CON971
CON970
FROM B FRONT C.B
S946 HALL (JAZZ)
S948 LIVE (POP)
S950 DISCO (ROCK)
S954 V-FADER
S939 JAZZ
S938 POP
S937 ROCK
S947 OFF
S949 ARENA (BGM)
S951 MOVIE (CLASSIC)
S953 BBE
S952 T-BASS
S942 OFF
S941 BGM
S940 CLASSIC

SCHEMATIC DIAGRAM-2 (FRONT)

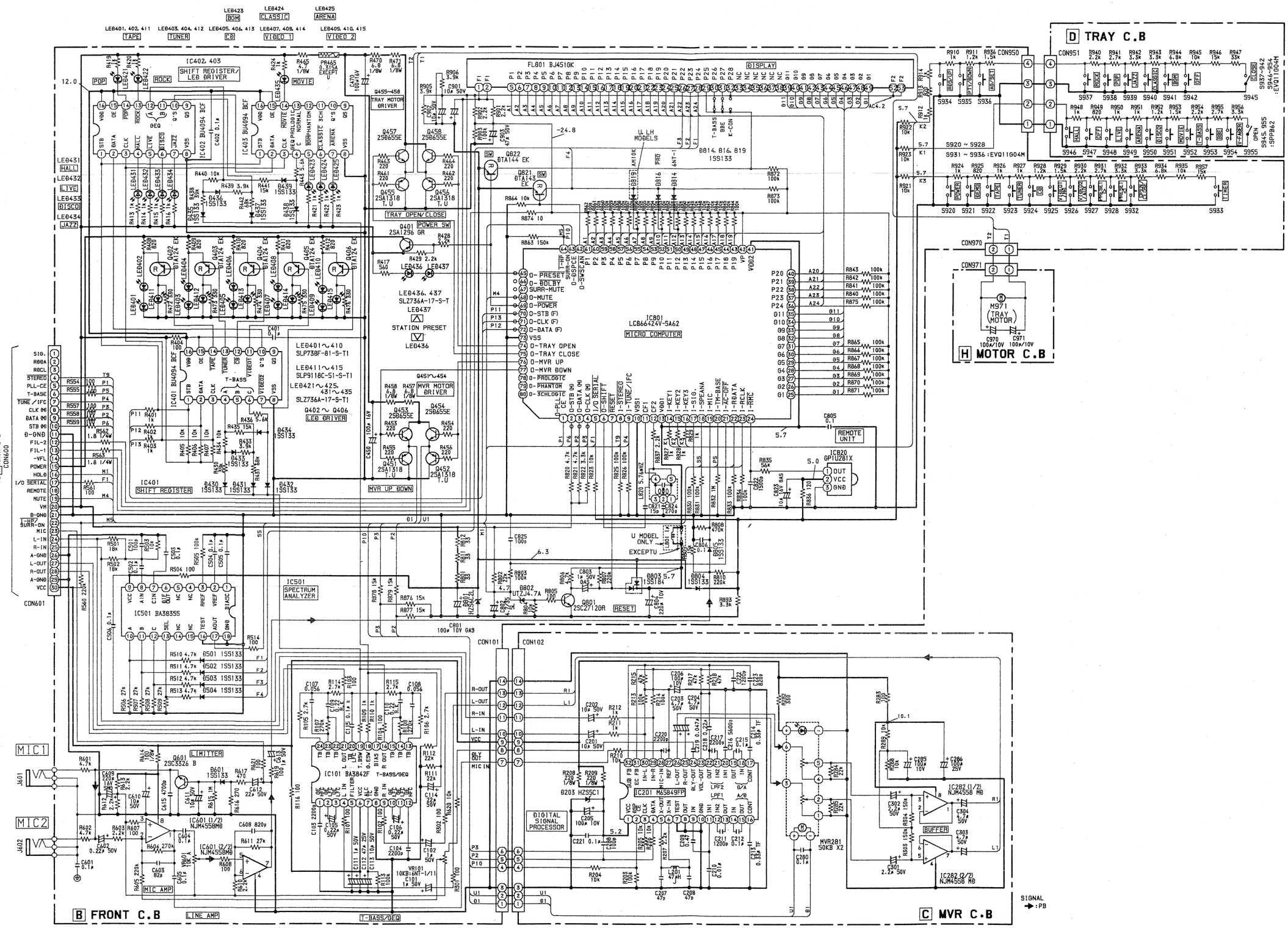

C MVR C.B

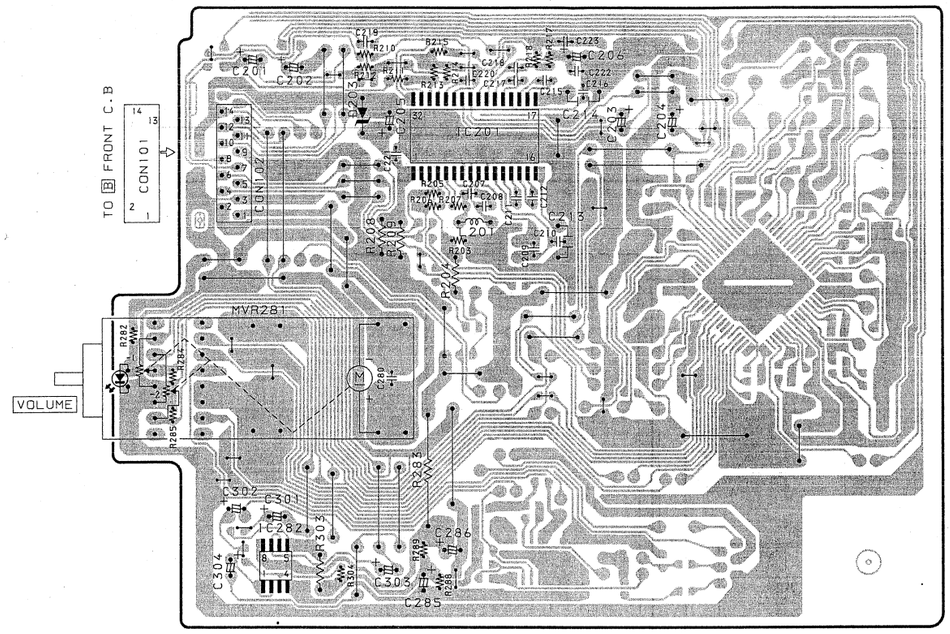

HE, HR, LH MODEL

G PT-H C.B

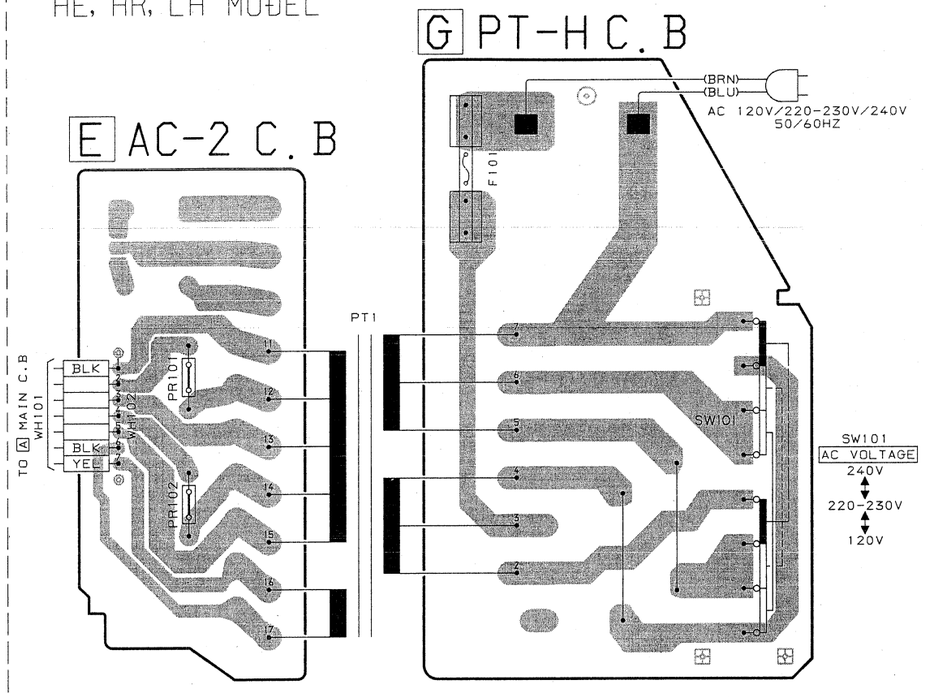

U MODEL

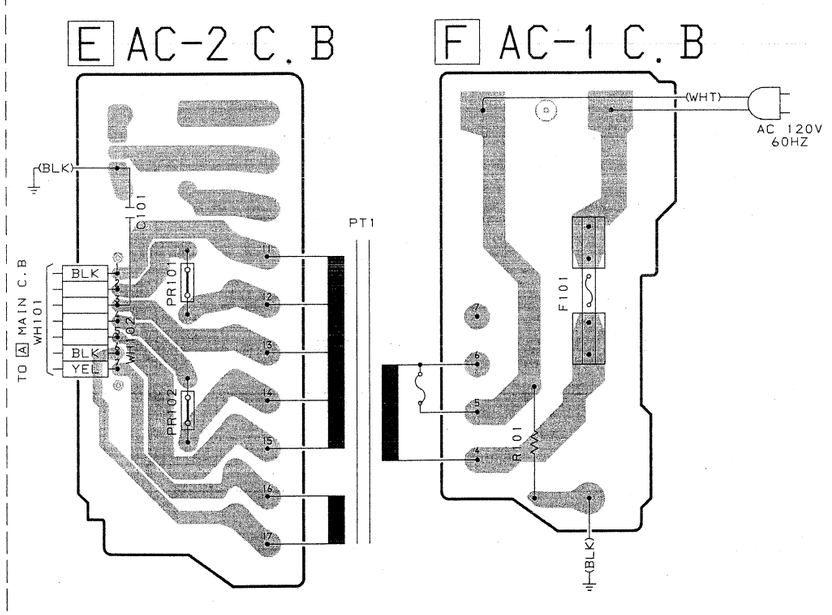

IC DESCRIPTION

IC, LC866424V-5A62

Pin No.	Pin Name	I/O	Description
1	O-PLLCE	O	PLL IC chip enable output.
2	O-STB(M)	O	Main shift register,data latch strobe output.
3	O-DATA(M)	O	Main shift register/PLL/DSP related,data output.
4	O-CLK(M)	O	Main shift register/PLL/DSP related,data transfer clock output.
5	I/O SERIAL	I/O	FD microprocessor,I/O serial.
6	O-SHIFT	O	Microprocessor clock shift output during tuner reception.
7	RESET	I	Reset input(Reset at "L").
8	I-STEREO	I	Tuner stereo sensing input.
9	I-TUNE/IFC	I	Tuner,SD sensing input/IF count serial data input.
10	VSS 1	-	GND.
11	CF 1	-	5.76 MHz oscillator.
12	CF 2	-	5.76 MHz oscillator.
13	VDD 1	-	Power supply input.
14~16	I-KEY 1~3	I	Key 1~Key 3 A/D input.
17	I-SIG	I	Signal level A/D input for RDS.(Not used)
18	I-SPEANA	I	Spectrum analyzer level A/D input.
19	I-MIC	I	Mic level A/D input for auto vocal fader.
20	I-TMBASE	I	Reference clock input for watch(Automatically supporting 8/50/60 Hz).
21	I-AC OFF	I	Power failure sensing input(Hold at"L").
22	I-RDSDA	I	Data input for RDS.(Not used)
23	I-RDSCL	I	Clock input for RDS.(Not used)
24	I-RMC	I	System remote control input(active Low).
25~35	G11~G1	O	FL grid output(G11~G1).
36~40	S24~S20	O	FL segment output(S24~S20).
41	VDD 2	-	Poewr supply input.
42	VP	-	Power supply for display.
43~48	S19~S14	O	FL segment output(S19~S14).
49	S13	O	FL segment output/Diode input supporting OIRT.
50	S12	O	FL segment output/Diode input supporting.
51	S11	O	FL segment output/Diode input supporting NTSC.
52	S10	O	FL segment output/Diode input supporting PRO.
53	S9	O	FL segment output/Diode input supporting LW.
54	S8	O	FL segment output/Diode input supporting SW.
55	S7	O	FL segment output/Diode input supporting AM 10K.
56	S6	O	FL segment output/Diode input supporting AM STEREO.
57	S5	O	FL segment output/Diode input supporting FM JPN.
58	S4	O	FL segment output/Diode input supporting RDS.
59	S3	I/O	FL segment output/Diode input supporting BBE.
60	S2	I/O	FL segment output/Diode input supporting DSP.
61	S1	I/O	FL segment output/Diode input supporting K-CON.
62	O-SWSCAN	O	CD turntable reverse direction rotation output/SW scan(timing output).

63	O-DSP CE	O	CD turntable forward direction rotation output/DSP chip enable.
64	SUR ON	O	SUR ON(output at"H").
65	O-$\overline{\text{PRESET LED}}$	O	Preset.
66~67	NC	-	Not used.
68	O-MUTE	O	System Mute ON/OFF output.
69	O-$\overline{\text{POWER}}$	O	System power supply ON/OFF output.
70	O-STB(F)	O	Front shift register,data latch strobe output.
71	O-CLK(F)	O	Front shift register,data clock output.
72	O-DATA(F)	O	Front shift register,data output.
73	VSS	-	GND.
74	O-TRAY OP	O	CD tray open output.
75	O-TRAY CL	O	CD tray close output.
76	O-VR UP	O	Vol up output.
77	O-VR DN	O	Vol down output.
78~80	NC	-	Not used.

IC BLOCK DIAGRAM

IC, BA3880S

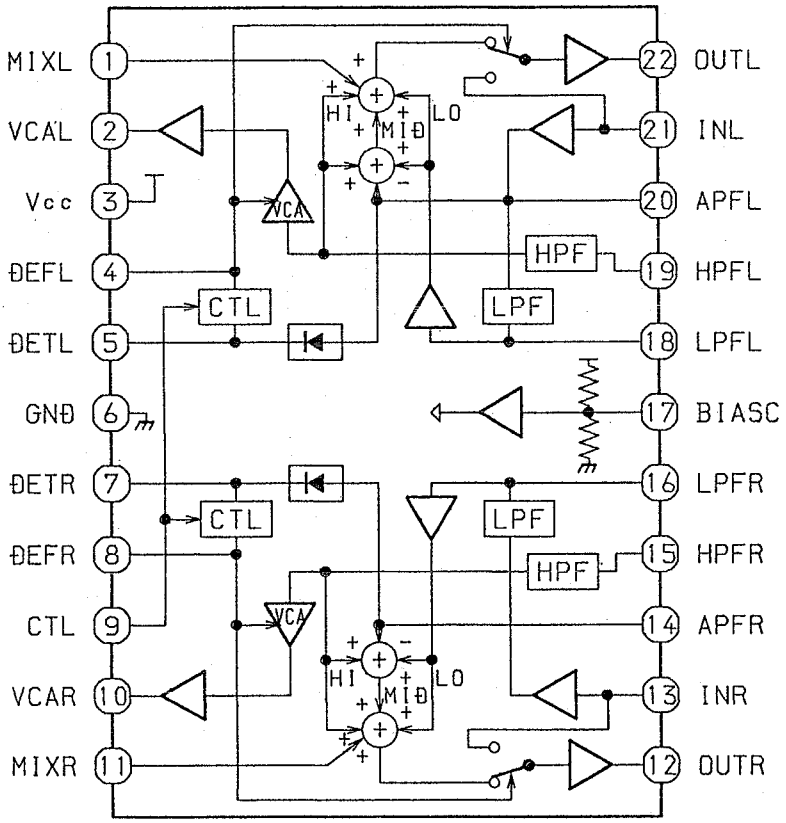

IC, M65849FP

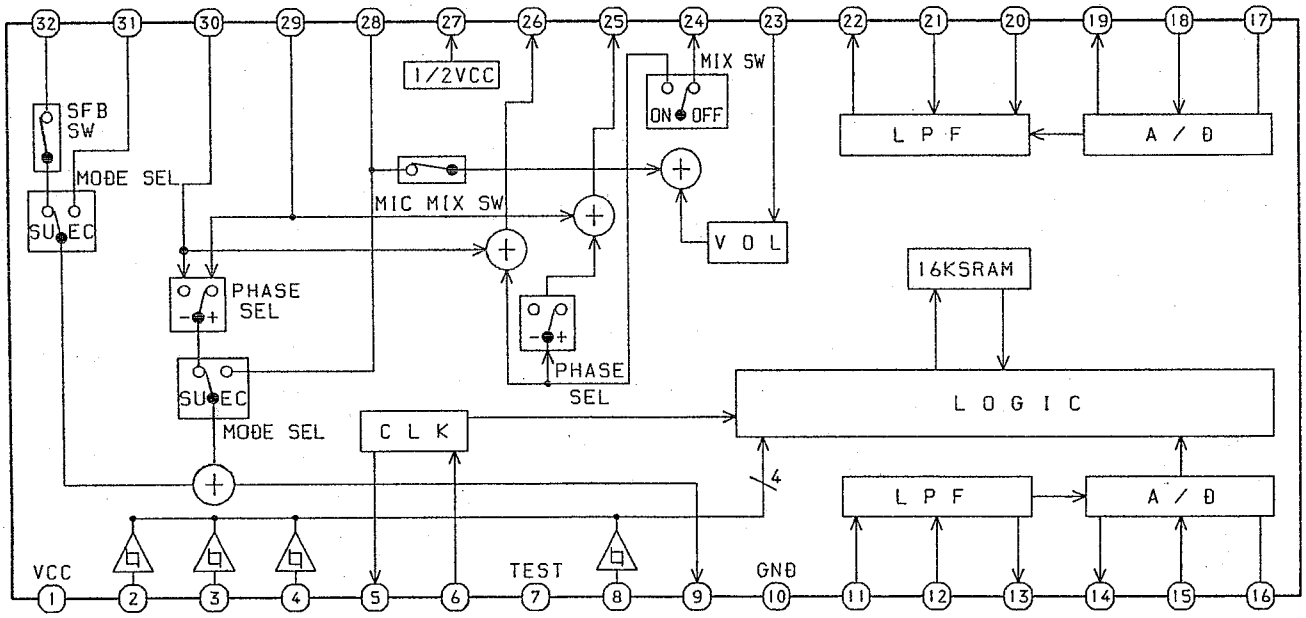

IC, BA3835S

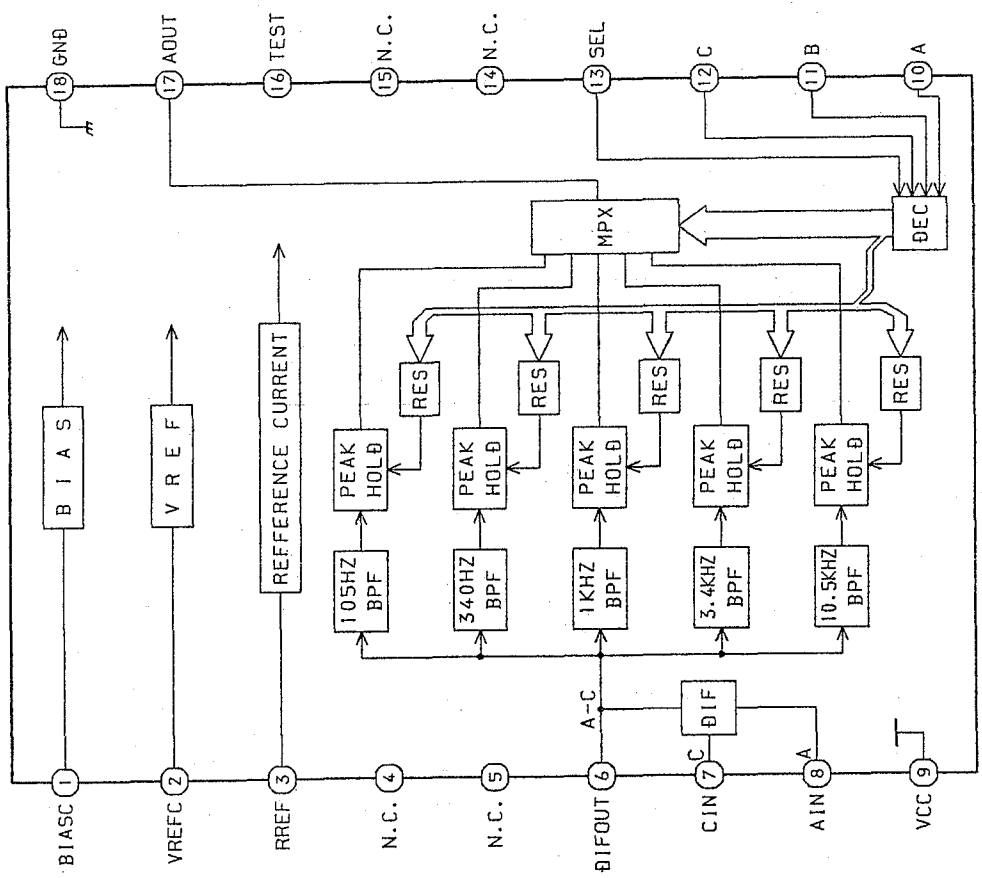

IC, LC72131D

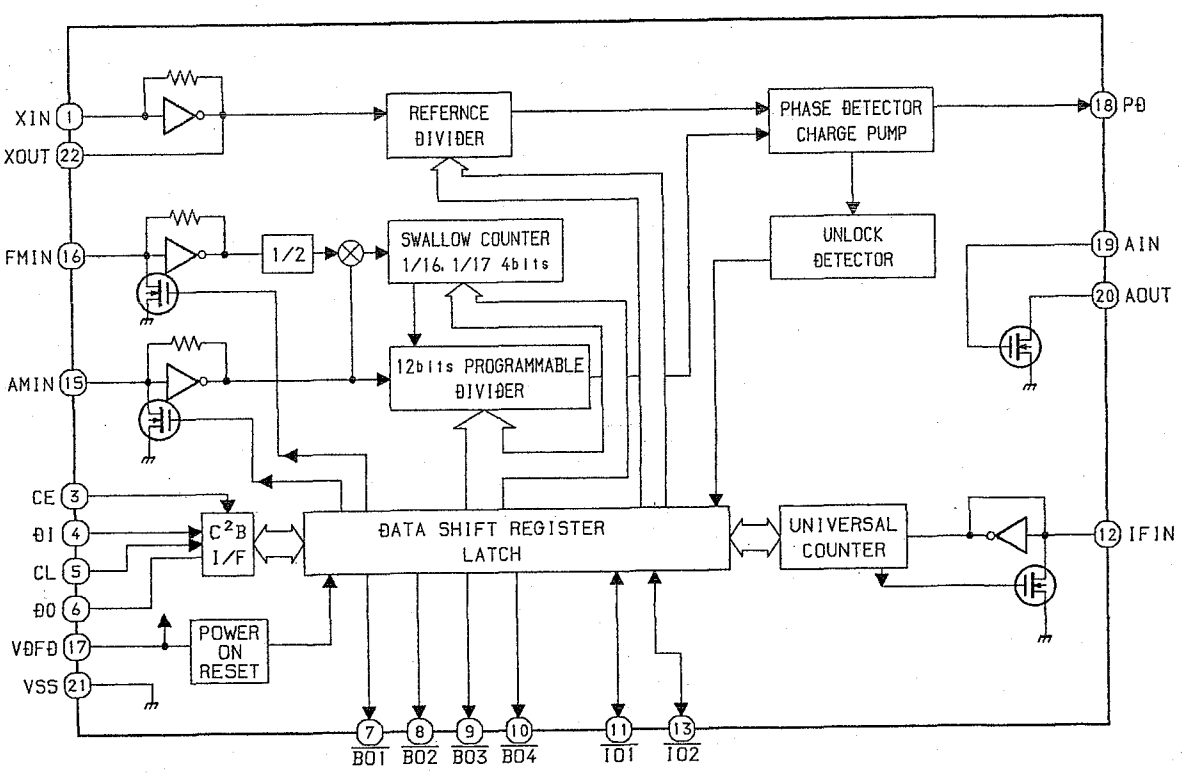

IC, BA3842F

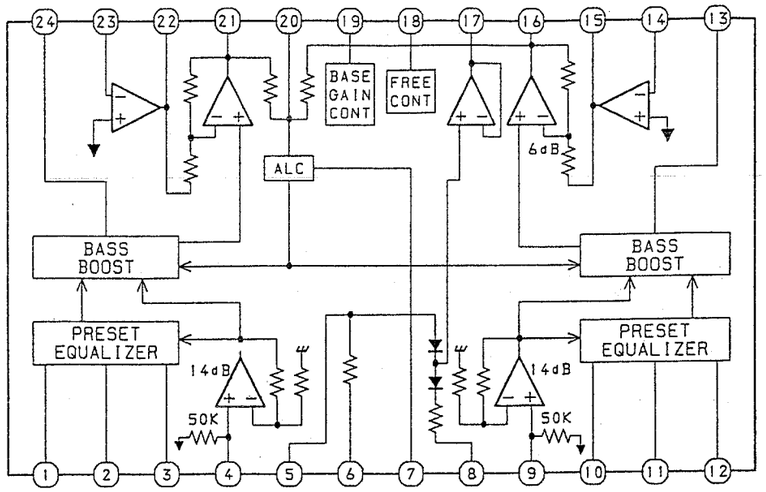

IC, BA3836

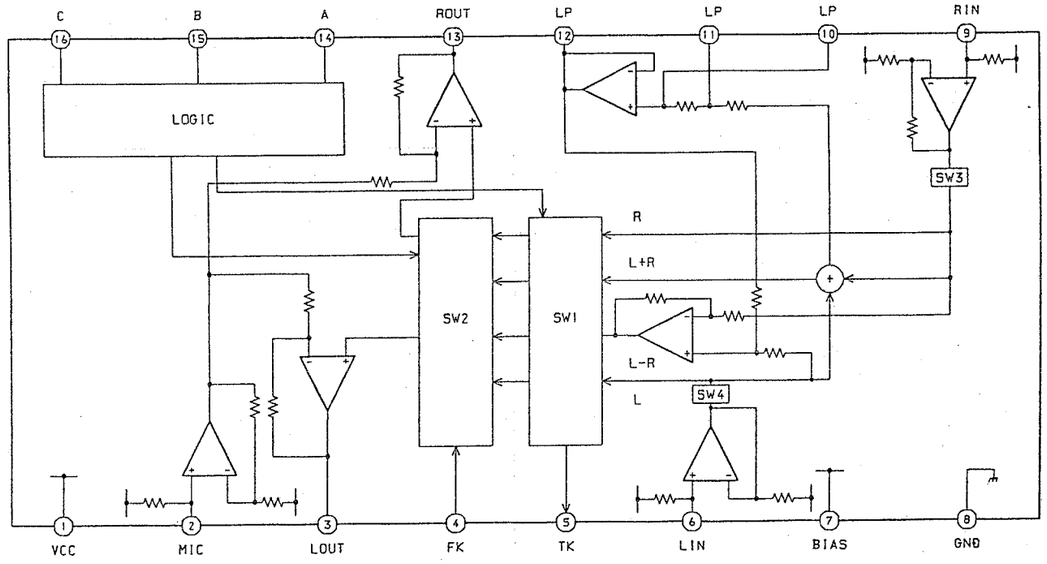

ELECTRICAL ADJUSTMENT

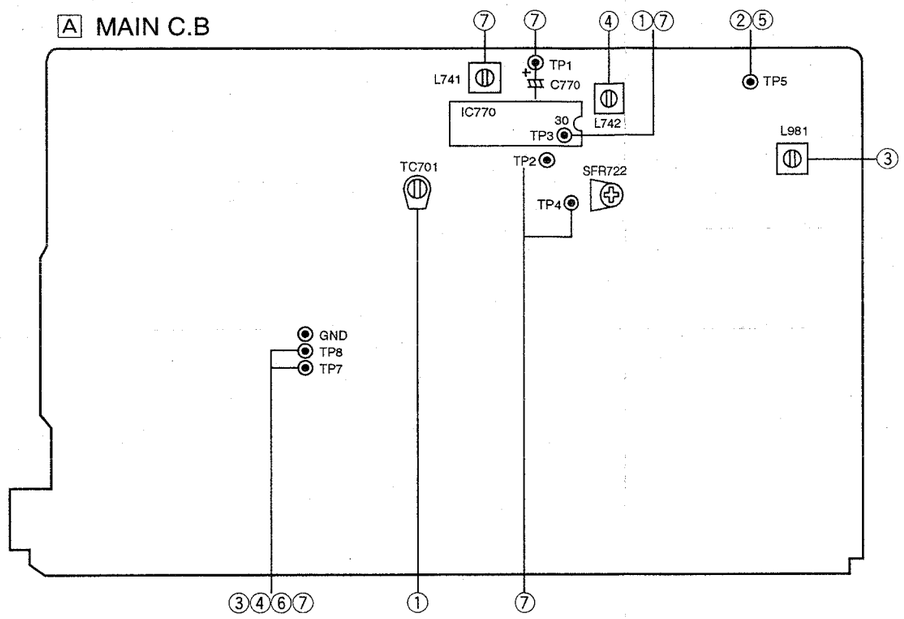

< TUNER SECTION >

1. Clock Adjustment
   Settings : • Test point : TP3 (CLK)
   • Adjustment location : TC701
   Method : Set to MW(AM) 1710kHz and adjust TC701 so that the test point becomes 2160kHz ± 0.01kHz.

2. MW(AM) VT Check
   Settings : • Test point : TP5 (VT)
   Method : Set to MW(AM) 1710kHz and check that the test point is 6.3V ± 1.0V.

3. MW(AM) Tracking Adjustment
   Settings : • Test point : TP7 (Lch), TP8 (Rch)
   • Adjustment location :L981
   Method : Set to MW(AM) 1000kHz and adjust L981 that the test point becomes maximum.

4. MW(AM) IF Adjustment
   Settings : • Test point : TP7 (Lch), TP8 (Rch)
   L742 ..... 450kHz

5. FM VT Check
   Settings : • Test point : TP5 (VT)
   Method : Set to FM 87.5MHz and check that the testpoint is more than 1.5V.
   Then set to FM 108MHz and check that the test point is less than 8.2V.

6. FM Tracking Check
   Settings : • Test point : TP7 (Lch), TP8 (Rch)
   Check that the test point is 3~12dB and distortion is less than 3% at FM 98.0MHz.

7. DC Balance / Mono Distortion Adjustment
   Settings : • Test point : TP1, TP2 (DC balance)
   TP7, TP8 (Mono Distortion)
   • Adjustment location : L741
   • Input level : 54dB
   Method : Set to FM 98.0MHz and adjust L741 so that the voltage between TP3 and TP4 becomes 0V ± 0.04V.
   Next, check that the distortion is less than 1.3%.

PRACTICAL SERVICE FIGURE

<TUNER SECTION>

<FM SECTION>

IHF Sensitivity :	Less than 10dB
(THD 3%)	[at 87.5MHz]
	Less than 11dB
	[at 98.0 / 108.0MHz (HE)]
	Less than 8dB
	[at 98.0 / 108.0MHz (HR, LH, U)]
S/N 50dB Quieting sensitivity :	
	Less than 35dB
	[at 87.5 / 98.0 / 108.0MHz]
Signal to noise ratio :	More than 54dB
	[at 98.0MHz]
Distortion :	Less than 1.5%
	[at 98.0MHz]
Auto stop level :	23dB ± 10dB [at 98.0MHz]
Stereo separation :	More than 25dB [at 98.0MHz]
Intermediate frequency :	10.7MHz

<MW(AM) SECTION>

Sensitivity :	48 ~ 62dB
(S/N 20 dB)	[at 603kHz (HE, HR)]
	[at 600kHz (LH, U)]
	47 ~ 59dB
	[at 999kHz (HE, HR)]
	[at 1000kHz (LH, U)]
	47 ~ 59dB
	[at 1404kHz (HE, HR)]
	[at 1400kHz (LH, U)]
Signal to noise ratio :	More than 36dB
	[at 999kHz (HE, HR)]
	[at 1000kHz (LH, U)]
Distortion :	Less than 1.5%
	[at 999kHz (HE, HR)]
	[at 1000kHz (LH, U)]
Auto stop level :	50dB ± 10dB
	[at 999kHz (HE, HR)]
	[at 1000kHz (LH, U)]
Intermediate frequency :	450kHz

MECHANICAL EXPLODED VIEW 1 / 1

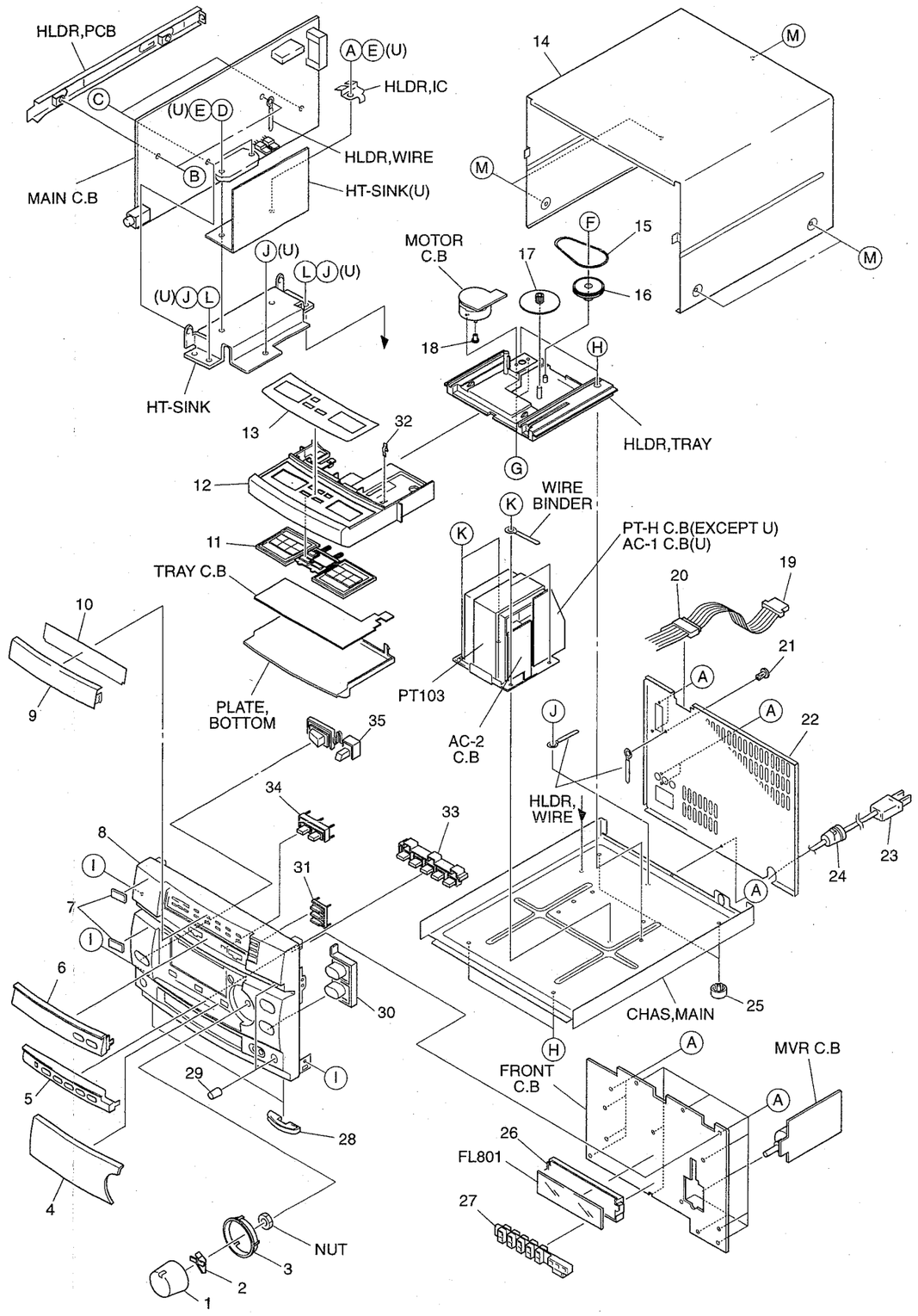

MECHANICAL PARTS LIST 1 ／ 1

DESCRIPTIONで判断できない物は “REFERENCE NAME LIST” を参照してください。
If can't understand for Description please kindly refer to “REFERENCE NAME LIST”.

REF. NO	PART NO.	ｶﾝﾘ NO.	DESCRIPTION
1	86-NT1-021-019		KNOB,RTRY VOL
2	86-NT1-022-019		REFLECTOR,VOL
3	86-NT1-026-019		RING,VOL
4	86-NT1-028-019		WINDOW,DISPLAY
5	86-NT1-006-019		PANEL,FUN
6	86-NT1-005-019		PANEL,GEQ
7	82-NE8-032-019		BADGE AIWA 27.5
8	86-NT1-001-019		CABI,FR<EXCEPT U>
8	86-NT1-031-019		CABI,FR U<U>
9	86-NT1-027-019		WINDOW,GEQ
10	86-NT1-025-019		PLATE,GEQ
11	86-NT1-013-019		KEY,GEQ
12	86-NT1-004-019		TRAY,CONTROL
13	86-NT1-024-119		PLATE,TRAY
14	86-NT1-003-019		CABI,STEEL
15	80-VW1-217-010		BELT,SQ 1.5
16	82-NT1-205-11K		PULLEY,LOADING
17	82-NT1-204-01K		GEAR,LOADING
18	80-VW1-204-010		PULLEY,MOTOR
19	82-NT3-631-119		CORD FG 15P
20	89-VT5-202-010		BUSHING,CORD
21	87-084-077-019		NYLON RIVET DIA3.5-4.5
22	86-NT1-002-019		PANEL,REAR HEJBNM<HEJ>
22	86-NT1-042-019		PANEL,REAR HRJBNM<HRJ>
22	86-NT1-044-019		PANEL,REAR LHBNM<LH>
22	86-NT1-041-019		PANEL,REAR UBNM<U>
⚠ 23	87-050-053-019		AC CORD ASSY,U-2<U>
⚠ 23	87-050-079-019		AC-CORD ASSY,E<EXCEPT U>
24	87-085-185-019		BUSHING,AC CORD E<EXCEPT U>
24	87-085-189-019		BUSHING,CORD U<U>
25	87-085-213-019		FOOT, H12.5
26	86-NT1-203-019		GUIDE,FL
27	86-NT1-202-019		GUIDE,LED
28	85-NC1-019-019		RING,FOOT
29	86-NT1-023-019		KNOB,RTRY MIC
30	86-NT1-009-019		KEY,UP/DOWN
31	86-NT1-011-019		KEY,RDS
32	81-MT3-211-019		LEVER,OPEN
33	86-NT1-020-019		KEY,ASSY FUN
34	86-NT1-030-019		KEY,TIMER
35	86-NT1-008-019		KEY,POWER
A	87-067-703-019		BVT2+3-10 (W/O SLOT)
B	87-078-084-019		BVTT+3-6 W,CONVEX
C	87-067-633-019		BVT2+3-8 W/CONVEX
D	87-067-581-019		BVT2+3-15 W/O SLOT<EXCEPT U>
E	87-067-822-019		BVT2+3-20 W/O SLOT<U>
F	87-861-095-419		VFT2+3-8 SLOT
G	87-261-073-419		V+2.6-6
H	87-067-584-019		BVT2+3-6 W/O SLOT
I	87-591-094-419		QIT + 3 - 6 GOLD
J	87-571-092-419		VIT+3-4
K	87-078-019-019		S-SCREW,IT+4-6
L	87-067-688-019		BVTT +3-6<EXCEPT U>
M	87-067-641-019		UTT2+3-8 W/O SLOT BLK

MODEL NO.

FD-NH9/NH90

PROTECTION OF EYES FROM LASER BEAM DURING SERVICING

This set employs laser. Therefore, be sure to follow carefully the instructions below when servicing.

WARNING!
WHEN SERVICING, DO NOT APPROACH THE LASER EXIT WITH THE EYE TOO CLOSELY. IN CASE IT IS NECESSARY TO CONFIRM LASER BEAM EMISSION. BE SURE TO OBSERVE FROM A DISTANCE OF MORE THAN 30cm FROM THE SURFACE OF THE OBJECTIVE LENS ON THE OPTICAL PICK-UP BLOCK.

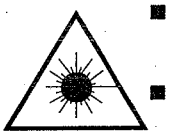

- Caution: Invisible laser radiation when open and interlocks defeated avoid expo-sure to beam.
- Advarsel: Usynlig laserståling ved åbning, når sikkerhedsafbrydere er ude af funktion. Undgå udsættelse for stråling.

VAROITUS!
Laiteen Käyttäminen muulla kuin tässä käyttöohjeessa mainit-ulla tavalla saattaa altistaa käyt-täjän turvallisuusluokan 1 ylit-tävälle näkymättömälle lasersäteilylle.

VARNING!
Om apparaten används på annat sätt än vad som specificeras i denna bruksanvising, kan användaren utsättas för osynling laserstrålning, som överskrider gränsen för laserklass 1.

CAUTION
Use of controls or adjustments or performance of procedures other than those specified herein may result in hazardous radi-ation exposure.

ATTENTION
L'utilisation de commandes, réglages ou procédures autres que ceux spécifiés peut entraîner une dangereuse exposition aux radiations.

ADVARSEL!
Usynlig laserståling ved åbning, når sikkerhedsafbrydereer ude af funktion. Undgå udsættelse for stråling.

This Compact Disc player is classified as a CLASS 1 LASER product.
The CLASS 1 LASER PRODUCT label is located on the rear exterior.

CLASS 1	LASER PRODUCT
KLASSE 1	LASER PRODUKT
LUOKAN 1	LASER LAITE
KLASS 1	LASER APPARAT

Precaution to replace Optical block
(KSS-213B)

Body or clothes electrostatic potential could ruin laser diode in the optical block. Be sure ground body and workbench, and use care the clothes do not touch the diode.

1) After the connection, remove solder shown in the right figure.

PICK-UP Assy P.C.B

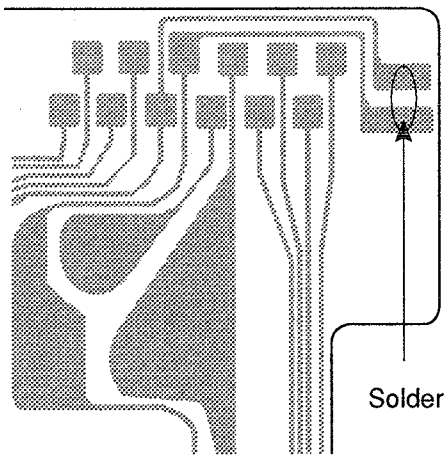

ELECTRICAL MAIN PARTS LIST

DESCRIPTIONで判断できない物は "REFERENCE NAME LIST" を参照してください。
If can't understand for Description please kindly refer to "REFERENCE NAME LIST".

REF. NO	PART NO.	カンリ NO.	DESCRIPTION
IC			
	87-020-454-010		IC,DN 6851
	87-017-022-089		IC,NJM2068M-D(T1)
	87-017-917-089		IC,BU4066BCF
	87-001-607-089		IC,NJM4558M
	87-002-272-089		IC,TC4052 BF
	87-001-985-010		IC,HA12142NT
	87-020-784-089		IC,TC4053BF
	87-017-888-089		IC,NJM4558MD
	87-017-745-019		IC,CXA1782BQ
	87-070-305-019		IC,BA6897S
	87-001-982-019		IC,TA7291S
	87-070-294-019		IC,CXD2508AQ
	86-NV1-610-010		IC,LC866424V-5A61
	87-017-375-089		IC,TC4094BF
TRANSISTOR			
	87-026-463-080		TR,2SA933S
	87-026-218-089		TR,DTC144ES
	87-026-448-089		TR,2SC1740SS
	87-026-463-089		TR,2SA933SRS
	87-026-219-089		TR,DTA144ES
	89-503-685-089		C-FET,2SK368GR
	89-113-625-089		C-TR 2SA 1362 GR(TAPG)
	87-026-210-089		C-TR,DTC144EK T147
	89-327-125-089		C-TR,2SC2712GR
	89-320-011-089		TR,2SC2001K
	89-109-521-089		TR,2SA952K
	89-318-155-089		TR,2SC1815GR
	89-333-317-889		TR,2SC3331 TU
	89-333-266-089		C-TR,2SC3326B
	87-026-233-089		C-TR,DTA114TK
	87-026-211-089		C-TR,DTA144EK T147
	89-110-373-089		C-TR,2SA1037S
	87-026-239-089		C-TR,DTC114TK
	89-113-187-089		TR,2SAI318TU
	89-421-722-389		TR,2SD2172 V/W
	87-026-223-089		C-TR,DTC143TK
	87-026-608-089		C-TR,DTC 123 JK
	87-A30-039-089		C-TR,2SD1383K
	89-112-965-089		TR,2SA1296GR
	87-026-228-089		C-TR DTA124EK
DIODE			
	87-020-465-089		DIODE,1SS133
	87-001-290-089		ZENER,HZS6B1L
	87-017-121-089		ZENER,HZS11A1
	87-020-123-089		DIODE DS446-AT (TA)
	87-001-731-089		ZENER HZS6C2L
	87-020-331-089		C-DIODE,DAN202K
	87-017-091-089		ZENER,HZS5C1
	87-020-339-089		C-DIODE,1SS226
	87-017-097-089		ZENER,HZS6B1
	87-020-330-089		C-DIODE,DAP202K
MAIN C.B			
C101	87-012-158-089		C-CAP,S 390P-50 CH
C102	87-012-158-089		C-CAP,S 390P-50 CH
C103	87-010-318-089		C-CAP,S 47P-50 CH
C104	87-010-318-089		C-CAP,S 47P-50 CH
C105	87-010-193-089		C-CAP,S 0.033-25 F
C106	87-010-193-089		C-CAP,S 0.033-25 F
C109	87-012-154-089		C-CAP,S 150P-50 CH
C110	87-012-154-089		C-CAP,S 150P-50 CH
C111	87-010-197-089		C-CAP,S 0.01-25 B
C112	87-010-197-089		C-CAP,S 0.01-25 B
C113	87-010-196-089		C-CAP,S 0.1-25 F
C151	87-012-158-089		C-CAP,S 390P-50 CH
C152	87-012-158-089		C-CAP,S 390P-50 CH
C153	87-010-322-089		C-CAP,S 100P-50 CH
C154	87-010-322-089		C-CAP,S 100P-50 CH
C155	87-010-197-089		C-CAP,S 0.01-25 B
C156	87-010-197-089		C-CAP,S 0.01-25 B
C157	87-012-156-089		C-CAP,S 220P-50 CH
C158	87-012-156-089		C-CAP,S 220P-50 CH
C159	87-010-318-089		C-CAP,S 47P-50 CH
C160	87-010-318-089		C-CAP,S 47P-50 CH
C181	87-016-492-089		C-CAP,S 0.33-16 FZ
C182	87-016-492-089		C-CAP,S 0.33-16 FZ
C183	87-010-197-089		C-CAP,S 0.01-25 B
C184	87-010-318-089		C-CAP,S 47P-50 CH
C185	87-010-197-089		C-CAP,S 0.01-25 B
C186	87-010-402-089		CAP,E 2.2-50 SME
C187	87-010-184-089		C-CAP,S 3300P-50 B
C205	87-010-426-089		C-CAP,S 0.012-25 B
C206	87-010-426-089		C-CAP,S 0.012-25 B
C303	87-010-183-089		C-CAP,S 2700P-50 B
C304	87-010-183-089		C-CAP,S 2700P-50 B
C305	87-010-404-089		CAP,E 4.7-50 SME
C306	87-010-404-089		CAP,E 4.7-50 SME
C323	87-012-157-089		C-CAP,S 330P-50 CH
C324	87-012-157-089		C-CAP,S 330P-50 CH
C341	87-010-196-089		C-CAP,S 0.1-25 F
C342	87-010-196-089		C-CAP,S 0.1-25 F
C343	87-010-196-089		C-CAP,S 0.1-25 F
C345	87-010-404-089		CAP,E 4.7-50 SME
C346	87-010-404-089		CAP,E 4.7-50 SME
C347	87-010-404-089		CAP,E 4.7-50 SME
C348	87-010-404-089		CAP,E 4.7-50 SME
C361	87-010-400-089		CAP,E 0.47-50 SME
C362	87-010-400-089		CAP,E 0.47-50 SME
C363	87-010-400-089		CAP,E 0.47-50 SME
C364	87-010-400-089		CAP,E 0.47-50 SME
C365	87-010-182-089		C-CAP,S 2200P-50 B
C366	87-010-182-089		C-CAP,S 2200P-50 B
C367	87-010-182-089		C-CAP,S 2200P-50 B
C368	87-010-182-089		C-CAP,S 2200P-50 B
C369	87-010-182-089		C-CAP,S 2200P-50 B
C370	87-010-182-089		C-CAP,S 2200P-50 B
C371	87-010-196-089		C-CAP,S 0.1-25 F
C372	87-010-196-089		C-CAP,S 0.1-25 F
C373	87-010-196-089		C-CAP,S 0.1-25 F
C374	87-010-196-089		C-CAP,S 0.1-25 F
C375	87-010-402-089		CAP,E 2.2-50 SME
C376	87-010-402-089		CAP,E 2.2-50 SME
C377	87-010-247-089		CAP,E 100-50 SME
C378	87-010-401-089		CAP,E 1-50 SME
C379	87-010-406-089		CAP,E 22-50 SME
C381	87-010-402-089		CAP,E 2.2-50 SME
C382	87-010-402-089		CAP,E 2.2-50 SME
C401	87-012-156-089		C-CAP,S 220P-50 CH
C402	87-012-156-089		C-CAP,S 220P-50 CH
C403	87-014-059-089		CAP,PP 1200P-100 J
C405	87-010-263-089		CAP,E 100-10 SME 5X11
C409	87-010-402-089		CAP,E 2.2-50 SME
C410	87-010-405-089		CAP,E 10-50 SME
C411	87-010-178-089		C-CAP,S 1000P-50 B
C412	87-010-221-089		CAP,E 470-10 11L
C414	87-010-196-089		C-CAP,S 0.1-25 F
C451	87-010-237-089		CAP,E 1000-16
C452	87-010-101-089		CAP,E 220-16 SME
C453	87-010-404-089		CAP,E 4.7-50 SME
C454	87-010-248-049		CAP,E 220-10 SME
C455	87-010-401-089		CAP,E 1-50 SME
C456	87-010-401-089		CAP,E 1-50 SME
C457	87-010-263-089		CAP,E 100-10 SME 5X11
C458	87-010-381-089		CAP,E 330-16 SME
C459	87-010-196-089		C-CAP,S 0.1-25 F
C481	87-010-406-089		CAP,E 22-50 SME
C482	87-010-406-089		CAP,E 22-50 SME
C483	87-010-263-089		CAP,E 100-10 SME 5X11
C484	87-010-408-089		CAP,E 47-50 SME
C485	87-010-221-089		CAP,E 470-10 11L
C486	87-010-221-089		CAP,E 470-10 11L
C501	87-010-405-089		CAP,E 10-50 SME
C502	87-010-198-089		C-CAP,S 0.022-25 B
C503	87-010-196-089		C-CAP,S 0.1-25 F
C504	87-010-196-089		C-CAP,S 0.1-25 F
C505	87-010-196-089		C-CAP,S 0.1-25 F
C506	87-018-209-089		CAP,TC-U 0.1-50 F
C516	87-010-381-089		CAP,E 330-16 SME
C517	87-010-404-089		CAP,E 4.7-50 SME
C518	87-010-404-089		CAP,E 4.7-50 SME
C519	87-010-405-089		CAP,E 10-50 SME
C520	87-010-405-089		CAP,E 10-50 SME
C521	87-012-154-089		C-CAP,S 150P-50 CH
C522	87-012-154-089		C-CAP,S 150P-50 CH
C523	87-010-405-089		CAP,E 10-50 SME
C524	87-010-316-089		C-CAP,S 33P-50 CH
C525	87-012-154-089		C-CAP,S 150P-50 CH
C526	87-012-154-089		C-CAP,S 150P-50 CH
C527	87-010-387-089		CAP,ELECT 470-25V
C528	87-010-384-089		CAP,E 100-25 SME
C529	87-010-374-089		CAP,E 47-10 11L
C530	87-010-316-089		C-CAP,S 33P-50 CH
C531	87-010-316-089		C-CAP,S 33P-50 CH
C533	87-012-157-089		C-CAP,S 330P-50 CH
C534	87-012-157-089		C-CAP,S 330P-50 CH
C535	87-012-154-089		C-CAP,S 150P-50 CH
C536	87-012-154-089		C-CAP,S 150P-50 CH
C601	87-010-182-089		C-CAP,S 2200P-50 B
C602	87-010-196-089		C-CAP,S 0.1-25 F
C603	87-010-196-089		C-CAP,S 0.1-25 F
C604	87-010-196-089		C-CAP,S 0.1-25 F
C605	87-010-404-089		CAP,E 4.7-50 SME
C606	87-010-193-089		C-CAP,S 0.033-25 F
C607	87-010-197-089		C-CAP,S 0.01-25 B
C608	87-010-402-089		CAP,E 2.2-50 SME
C609	87-010-265-089		CAP,E 33-16 SME
C610	87-010-213-089		C-CAP,S 0.015-25 B
C611	87-010-197-089		C-CAP,S 0.01-25 B
C612	87-010-263-089		CAP,E 100-10 SME 5X11
C613	87-018-134-089		CAP,TC-U 0.01-16 Y
C614	87-010-193-089		C-CAP,S 0.033-25 F
C615	87-010-197-089		C-CAP,S 0.01-25 B
C616	87-010-193-089		C-CAP,S 0.033-25 F
C617	87-010-197-089		C-CAP,S 0.01-25 B
C618	87-010-146-089		C-CAP,S 2P-50 CH
C619	87-010-154-089		C-CAP,S 10P-50 CH
C620	87-010-263-089		CAP,E 100-10 SME 5X11
C621	87-010-178-089		C-CAP,S 1000P-50 B
C622	87-010-198-089		C-CAP,S 0.022-25 B
C623	87-010-196-089		C-CAP,S 0.1-25 F
C624	87-010-197-089		C-CAP,S 0.01-25 B
C625	87-010-263-089		CAP,E 100-10 SME 5X11
C626	87-010-248-089		CAP,E 220-10 SME
C627	87-010-197-089		C-CAP,S 0.01-25 B
C628	87-010-260-089		CAP,E 47-25 SME
C629	87-010-196-089		C-CAP,S 0.1-25 F
C640	87-010-196-089		C-CAP,S 0.1-25 F
C641	87-010-221-089		CAP,E 470-10 11L
C642	87-010-196-089		C-CAP,S 0.1-25 F
C643	87-010-197-089		C-CAP,S 0.01-25 B
C644	87-010-263-089		CAP,E 100-10 SME 5X11
C645	87-010-221-089		CAP,E 470-10 11L
C646	87-010-197-089		C-CAP,S 0.01-25 B
C647	87-010-196-089		C-CAP,S 0.1-25 F
C648	87-010-196-089		C-CAP,S 0.1-25 F
C649	87-010-193-089		C-CAP,S 0.033-25 F
C661	87-010-196-089		C-CAP,S 0.1-25 F
C662	87-010-260-089		CAP,E 47-25 SME
C681	87-010-197-089		C-CAP,S 0.01-25 B
C692	87-010-381-089		CAP,E 330-16 SME
C693	87-010-196-089		C-CAP,S 0.1-25 F
C701	87-010-194-089		C-CAP,S 0.047-25 F
C702	87-010-188-089		C-CAP,S 6800P-50 B
C703	87-010-186-089		C-CAP,S 4700P-50 B
C704	87-012-156-089		C-CAP,S 220P-50 CH
C705	87-010-404-089		CAP,E 4.7-50 SME
C706	87-010-263-089		CAP,E 100-10 SME 5X11
C707	87-010-197-089		C-CAP,S 0.01-25 B
C708	87-010-400-089		CAP,E 0.47-50 SME
C709	87-010-197-089		C-CAP,S 0.01-25 B
C711	87-010-196-089		C-CAP,S 0.1-25 F
C713	87-010-263-089		CAP,E 100-10 SME 5X11
C714	87-010-197-089		C-CAP,S 0.01-25 B
C715	87-010-318-089		C-CAP,S 47P-50 CH
C716	87-010-318-089		C-CAP,S 47P-50 CH
C717	87-018-134-089		CAP,TC-U 0.01-16 Y
C741	87-012-153-089		C-CAP,S 120P-50 CH
C742	87-012-153-089		C-CAP,S 120P-50 CH
C743	87-010-321-089		C-CAP,S 82P-50 CH
C744	87-010-321-089		C-CAP,S 82P-50 CH
C745	87-010-321-089		C-CAP,S 82P-50 CH
C746	87-010-321-089		C-CAP,S 82P-50 CH
C747	87-012-153-089		C-CAP,S 120P-50 CH
C748	87-012-153-089		C-CAP,S 120P-50 CH
C749	87-012-153-089		C-CAP,S 120P-50 CH
C750	87-012-153-089		C-CAP,S 120P-50 CH
C751	87-010-401-089		CAP,E 1-50 SME
C752	87-010-401-089		CAP,E 1-50 SME
C753	87-010-186-089		C-CAP,S 4700P-50 B
C754	87-010-186-089		C-CAP,S 4700P-50 B
C755	87-010-221-089		CAP,E 470-10 11L
C756	87-010-263-089		CAP,E 100-10 SME 5X11
C771	87-018-119-089		CAP,TC-U 100P-50 B
C772	87-018-119-089		CAP,TC-U 100P-50 B
C773	87-010-318-089		C-CAP,S 47P-50 CH
C774	87-018-131-089		CAP,TC-U 1000P-50 B
C775	87-018-209-089		CAP,TC-U 0.1-50 F<YU>
C791	87-010-263-089		CAP,E 100-10 SME 5X11
C792	87-010-197-089		C-CAP,S 0.01-25 B
C901	87-018-149-089		CAP,TC-U 15P-50 CH
C902	87-012-155-089		C-CAP,S 180P-50 CH
C941	87-010-196-089		C-CAP,S 0.1-25 F
C942	87-010-196-089		C-CAP,S 0.1-25 F
C943	87-010-384-089		CAP,E 100-25 SME
C944	87-010-322-089		C-CAP,S 100P-50 CH
C945	87-010-322-089		C-CAP,S 100P-50 CH
C946	87-010-322-089		C-CAP,S 100P-50 CH
CON903	86-NV1-613-019		CONN ASSY,4P CST
CON910	87-009-065-019		CONN,15P FG
EMI803	87-008-372-089		FLTR,EMI BL01RN1
FC1	85-NFT-611-119		FF-CABLE,16P-1.0
FC2	88-916-301-119		FF-CABLE,16P 1.25
FC3	88-909-251-119		FF-CABLE,9P 1.25
FC4	88-906-201-119		FF-CABLE,6P 1.25
FC5	84-ZG1-630-019		CABLE FFC 6P-1.25
FL901	86-NV1-619-019		FL,7-ST-27G
J901	81-VP1-635-019		JACK,PIN 3P EARTH
J902	81-VP1-634-019		JACK,PIN 3P
J903	81-VP1-635-019		JACK,PIN 3P EARTH
L301	86-NV1-618-019		COIL,TRAP 108K
L302	86-NV1-618-019		COIL,TRAP 108K
L303	87-003-131-089		COIL,10MH J
L304	87-003-131-089		COIL,10MH J
L305	87-003-123-089		COIL,2.2MH J

REF. NO	PART NO.	カンリ NO.	DESCRIPTION
L306	87-003-123-089		COIL,2.2MH J
L401	86-NV1-617-019		COIL,OSC BIAS 108K
L402	87-005-447-089		COIL,180UH FLR50
L451	87-005-474-089		COIL,12UH J FLR50
L601	87-003-295-089		COIL,10UH
L901	87-A50-052-019		COIL,CLOCK 5.76MHZ T1
LED791	87-A40-123-019		LED,SLZ-8128A-01-B
LED910	87-070-108-019		LED,SLF-301C-37
LED911	87-070-108-019		LED,SLF-301C-37
SFR101	87-024-238-089		SFR,1K DIA6 V TP
SFR102	87-024-238-089		SFR,1K DIA6 V TP
SFR151	87-024-238-089		SFR,1K DIA6 V TP
SFR152	87-024-238-089		SFR,1K DIA6 V TP
SFR301	87-024-271-089		SFR4.7K DIA6 V
SFR302	87-024-271-089		SFR4.7K DIA6 V
SFR401	87-024-275-089		SFR,47K DIA6 V TP
SFR402	87-024-275-089		SFR,47K DIA6 V TP
SFR601	87-024-175-089		SFR,47K DIA6 V
SFR602	87-024-176-089		SFR,100K DIA6 V
SFR603	87-024-176-089		SFR,100K DIA6 V
SW731	87-036-109-019		SW,PUSH SPPB 61
SW732	87-036-109-019		SW,PUSH SPPB 61
VR501	86-NV1-616-019		VR,50KBX2 RK14K12A0L30
VR502	81-MX4-636-019		VR,50KBX2 RK14K12A0L30
X701	87-030-270-089		VIB,XTAL 16.9344MHZ

KEY1 C.B

FC6	88-909-251-119		FF-CABLE,9P 1.25
LED901	87-001-161-019		LED,SEL 2410 E GR
LED902	87-001-161-019		LED,SEL 2410 E GR
LED903	87-001-161-019		LED,SEL 2410 E GR
LED904	87-001-161-019		LED,SEL 2410 E GR
LED905	87-001-161-019		LED,SEL 2410 E GR
LED906	87-001-161-019		LED,SEL 2410 E GR
S901	87-A90-095-089		SW,TACT EVQ11G04M
S902	87-A90-095-089		SW,TACT EVQ11G04M
S903	87-A90-095-089		SW,TACT EVQ11G04M
S904	87-A90-095-089		SW,TACT EVQ11G04M
S905	87-A90-095-089		SW,TACT EVQ11G04M
S906	87-A90-095-089		SW,TACT EVQ11G04M
S907	87-A90-095-089		SW,TACT EVQ11G04M
S908	87-A90-095-089		SW,TACT EVQ11G04M
S909	87-A90-095-089		SW,TACT EVQ11G04M
S910	87-A90-095-089		SW,TACT EVQ11G04M

KEY2 C.B

LED907	87-002-817-019		LED,SEL 2215 S RED
LED908	87-002-817-019		LED,SEL 2215 S RED
LED909	87-002-817-019		LED,SEL 2215 S RED
S912	87-A90-095-089		SW,TACT EVQ11G04M
S913	87-A90-095-089		SW,TACT EVQ11G04M
S914	87-A90-095-089		SW,TACT EVQ11G04M
S915	87-A90-095-089		SW,TACT EVQ11G04M
S916	87-A90-095-089		SW,TACT EVQ11G04M

REF. NO	PART NO.	カンリ NO.	DESCRIPTION

LED C.B

LED701	87-017-806-010		LED,SEL1810DM
LED702	87-017-350-080		LED,SEL1550CM
LED703	87-017-350-080		LED,SEL1550CM
LED704	87-017-806-010		LED,SEL1810DM

VIDEO2 C.B

C1	87-010-112-089		CAP,E 100-16 SME
C2	87-010-405-089		CAP,E 10-50 SME
C3	87-010-405-089		CAP,E 10-50 SME
C4	87-010-405-089		CAP,E 10-50 SME
C5	87-010-405-089		CAP,E 10-50 SME
C6	87-010-112-089		CAP,E 100-16 SME

T-T C.B

C401	87-018-214-089		CAP TC U 0.1-50 F
FC401	84-ZG1-614-119		CABLE FFC 5P-1.25
M401	87-045-364-019		MOTOR,(BCH3B14)
PS401	87-026-573-019		P-SNSR,GP1S53V

DECK C.B

	82-ZM1-625-019		RBN-CORD,4P-55
CON501	87-099-756-019		CONN,15P 9604S F
SFR1	87-024-581-010		SFR,3.3K DIA 6H
SOL1	82-ZM1-618-310		SOL ASSY,27
SOL2	82-ZM1-626-010		SOL ASSY,27K
SW1	87-036-378-010		SW,PUSH 1-1-1 SH2
SW2	87-036-378-010		SW,PUSH 1-1-1 SH2
SW3	87-036-378-010		SW,PUSH 1-1-1 SH2
SW4	87-036-378-010		SW,PUSH 1-1-1 SH2
SW5	87-036-378-010		SW,PUSH 1-1-1 SH2
SW6	87-036-378-010		SW,PUSH 1-1-1 SH2
SW7	87-036-378-010		SW,PUSH 1-1-1 SH2
SW8	87-036-378-010		SW,PUSH 1-1-1 SH2
SW9	87-036-378-010		SW,PUSH 1-1-1 SH2

HEAD-1 C.B

W106	86-NV1-611-019		CONN ASSY,3P DECK1

HEAD-2 C.B

W105	86-NV1-612-019		CONN ASSY,8P DECK2

DRIVE C.B

M1	87-045-358-019		MOT,RF-310TA 43
M2	87-045-356-019		MOT,RF-310TA 30
SW1	87-A90-042-019		SW,LEAF MSW 17310 MVPO

○ チップ抵抗部品コード／CHIP RESISTOR PART CODE

チップ抵抗部品コードの成り立ち
Chip Resistor Part Coding

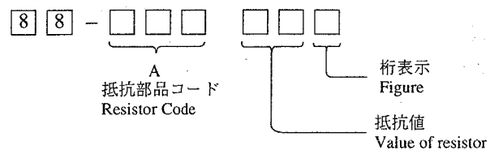

チップ抵抗
Chip resistor

容量 Wattage	種類 Type	許容誤差 Tolerance	記号 Symbol	寸法／Dimensions (mm) 外形／Form	L	W	t	抵抗コード ：A Resistor Code: A
1／16W	1608	±5%	CJ	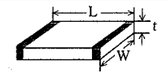	1.6	0.8	0.45	108
1／10W	2125	±5%	CJ		2	1.25	0.45	118
1／8W	3216	±5%	CJ		3.2	1.6	0.55	128

TRANSISTOR ILLUSTRATION

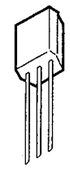

2SA933S
2SC1740S
DTA144ES
DTC144ES

2SA952
2SA1296
2SA1318
2SC1815
2SC2001
2SC3331
2SD2172

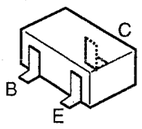

2SA1037
2SA1362
2SC2712
2SC3326
2SD1383
DTA114TK

DTA124EK
DTA144EK
DTC114TK
DTC123JK
DTC143TK
DTC144EK

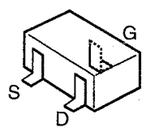

2SK368

BLOCK DIAGRAM

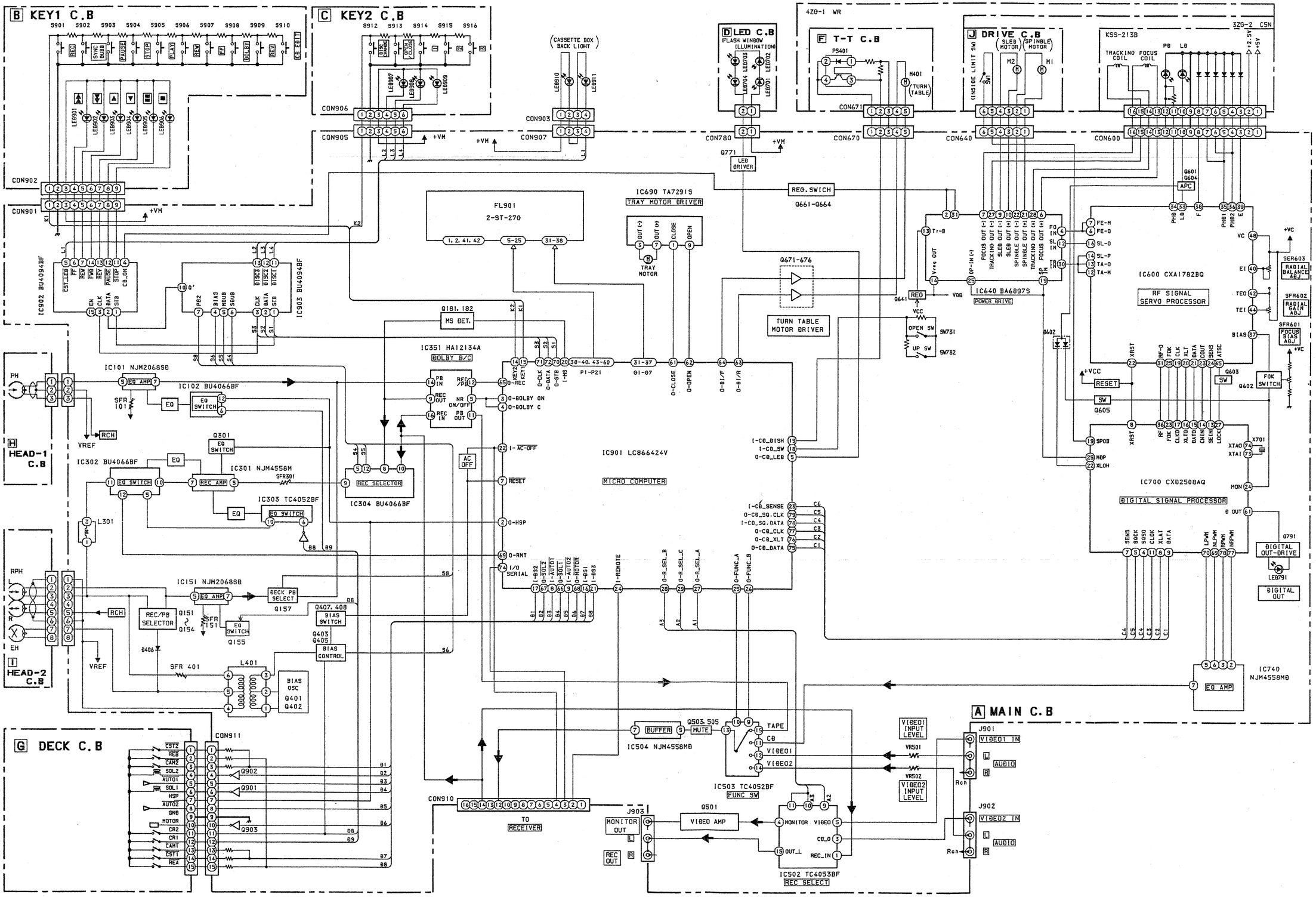

WIRING-1 (MAIN)

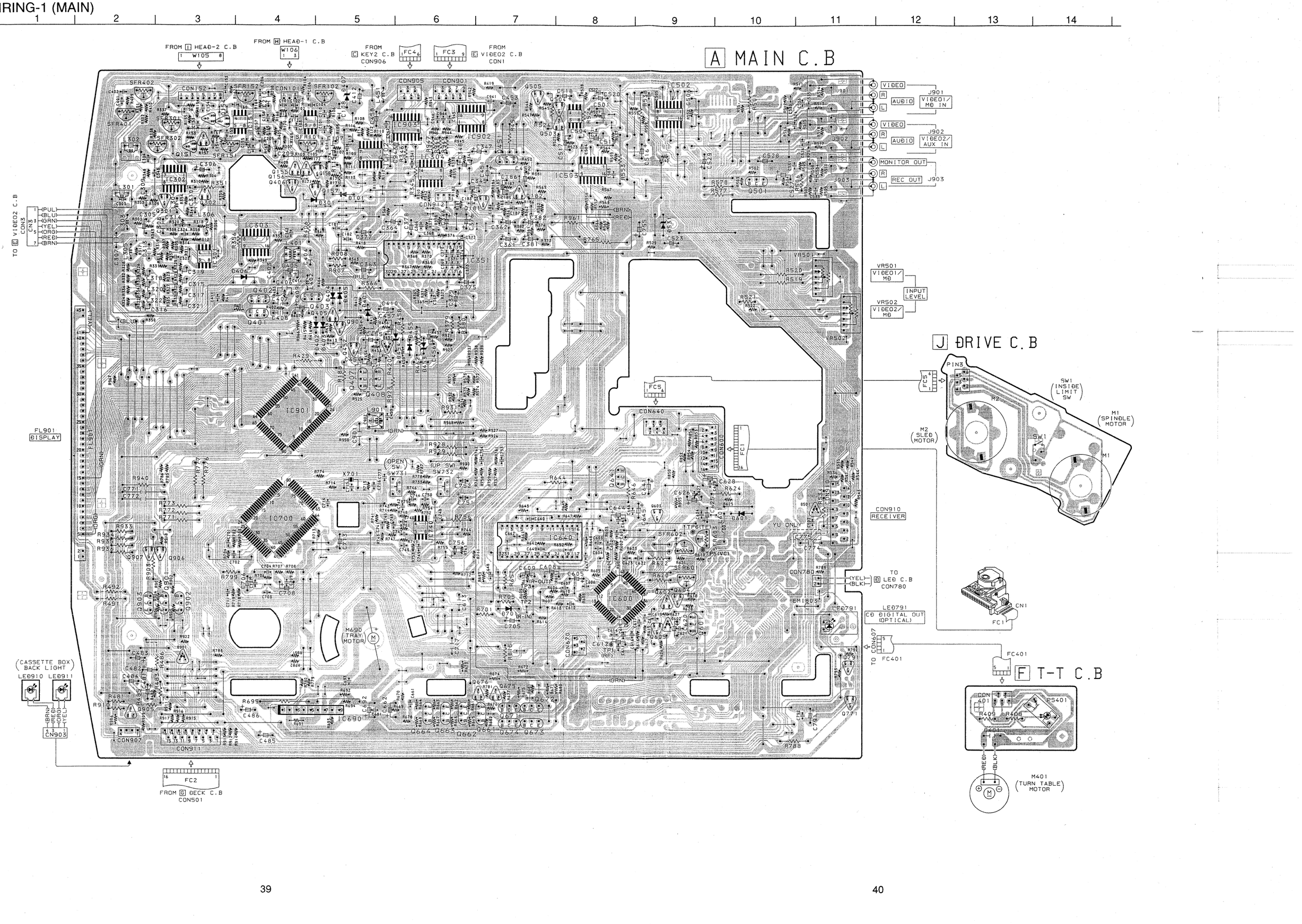

SCHEMATIC DIAGRAM-1 (MAIN 1/2)

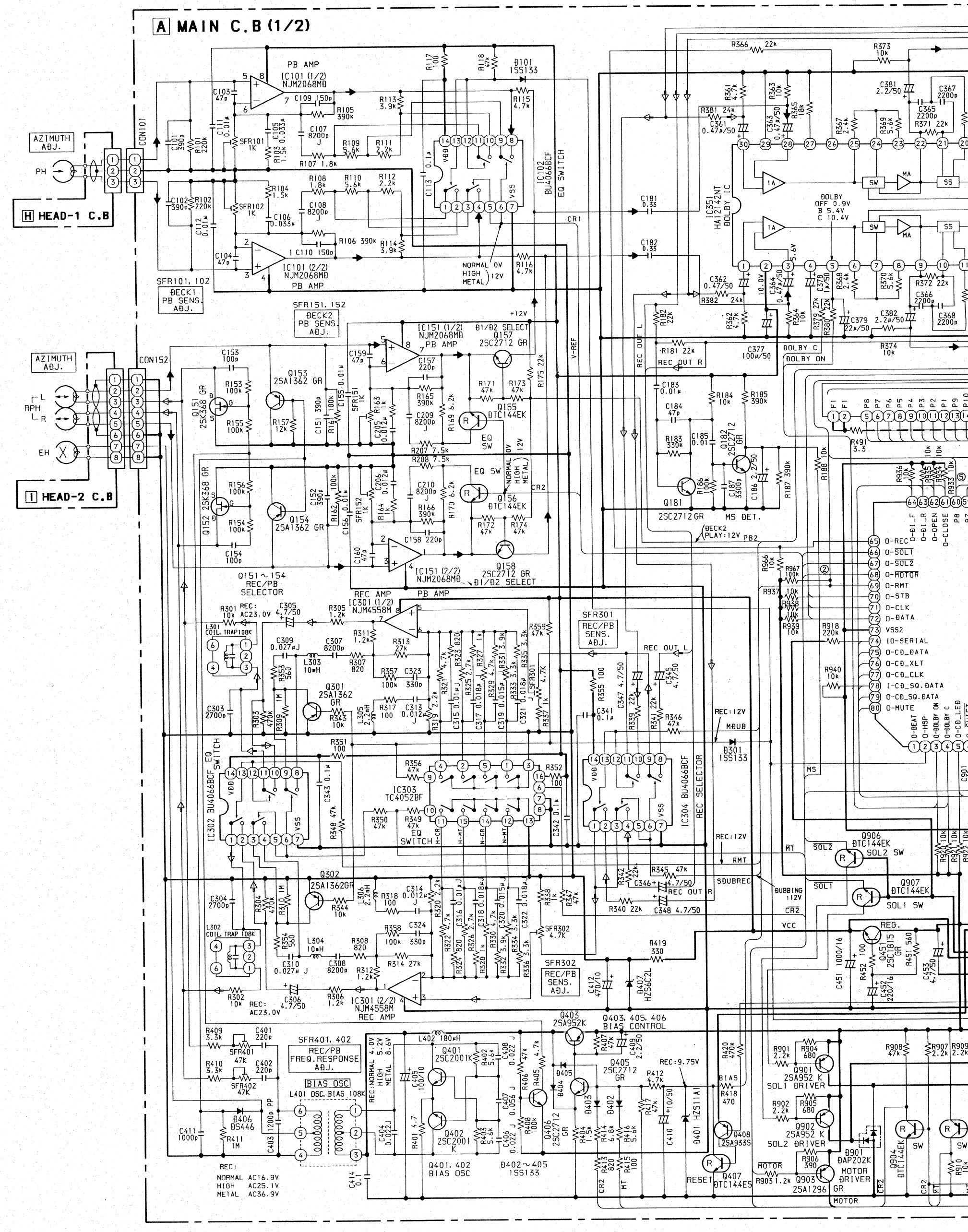

SET KEY OFF 5.6V			
REC SW ON	0V	REW	2.38V
DUB	0.64V	FF	2.83V
PAUSE	1.13V	DOLBY	3.3V
STOP	1.53V	REC MODE	3.75V
PLAY	2.0V	EDIT	4.18V

SET KEY OFF	5.6V
DISC CHANGE	0V
OPEN/CLOSE	0.6V
1	1.13V
2	1.53V
3	2.0V

TO E VIDEO2 C.B CON3

FROM E VIDEO2 C.B CON2

CON1 TO E VIDEO2 C.B

B KEY1 C.B

C KEY2 C.B

IC901 LC866424V-5A61 SYSTEM CONTROL

IC902 TC4094BF SHIFT REGISTER

IC903 TC4094BF SHIFT REGISTER

IC503 TC4052BF FUNC SW

IC502 TC4053BF REC SELECT

IC504 (1/2) C501 NJM4558MD

IC504 (2/2) NJM4558MD

Q501 2SC3331 TU

Q503 2SC3326 B

Q504 2SC3326 B

Q505 DTA114TK MUTE SW

Q451 2SC1815 GR

Q452 2SC2712 GR

Q907 DTC144EK SOL2 SW

Q904 DTC144EK SOL1 SW

Q905 DTA124EK

Q906 DTC144EK

D451 DAN202K

D453 HZS5C1

D454 HZS6C2L

D455 1SS133

D501 1SS226

D531 HZS6B1

FL901 7-ST-27G

FLS301C-37 (CASSETTE BOX BACK LIGHT)

L901 5.76M

L451 12μH

CON901 CON902 CON903 CON905 CON906 CON907 CON910 CON911

J901 VIDEO1 IN

J902 VIDEO2 IN

J903 MONITOR OUT

REC OUT

VIDEO1 /MD IN

VIDEO2 /AUX IN

VR501 50K B VIDEO1/MD INPUT LEVEL

VR502 50K B VIDEO2/AUX INPUT LEVEL

TO RECEIVER CPN901

G DECK C.B

SFR1 TAPE SPEED ADJ.

TO/FROM A MAIN C.B (2/2)

SIGNAL
:AUDIO PB
:AUDIO REC
:VIDEO

FL (7-ST-27G) GRID ASSIGNMENT ／ ANODE CONNECTION

GRID ASSIGNMENT

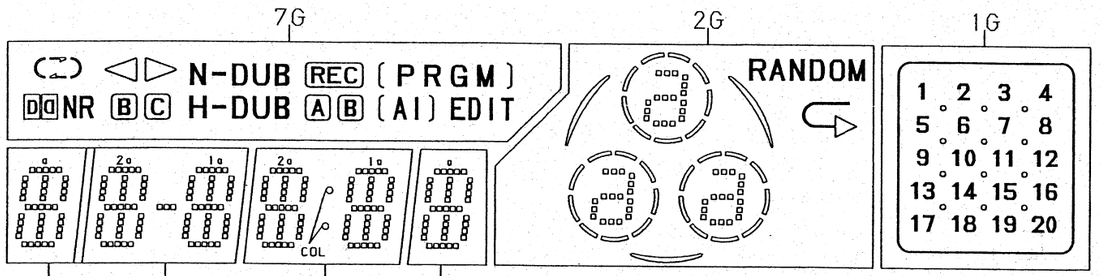

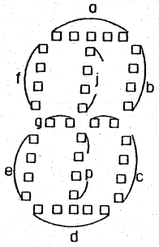

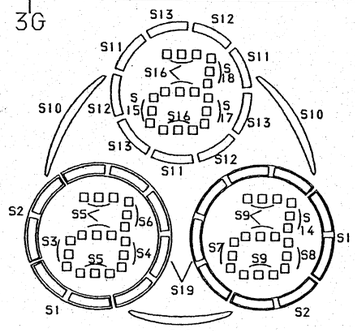

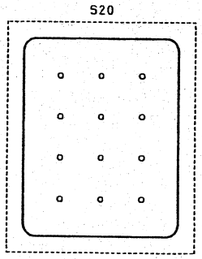

ANODE CONNECTION

	7G	6G	5G	4G	3G	2G	1G
P1	NR	d	1d	1d	d	S1	**20**
P2	(	p	1p	1p	p	S2	**19**
P3		e	1e	1e	e	S3	**18**
P4	)	c	1c	1c	c	S4	**17**
P5	B (LEFT)	g	1g	1g	g	S5	**16**
P6	C	f	1f	1f	f	S6	**15**
P7	◁	b	1b	1b	b	S7	**14**
P8	▷	j	1j	1j	j	S8	**13**
P9	**N-DUB**	a	1a	1a	a	S9	**12**
P10	**H-DUB**	—	2d	2d	—	S10	**11**
P11	**REC**	—	2p	2p	—	S11	**10**
P12	A	—	2e	2e	—	S12	**9**
P13	B (RIGHT)	—	2c	2c	—	S13	**8**
P14	**PRGM**	—	2g	2g	—	S14	**7**
P15	**AI**	—	2f	2f	—	S15	**6**
P16	**EDIT**	—	2b	2b	—	S16	**5**
P17	**(PRGM)**	—	2j	2j	—	S17	**4**
P18	**(AI)**	—	2a	2a	—	S18	**3**
P19	—	—	□□□	COL (HIGH)	—	S19	**2**
P20	—	—	—	COL (LOW)	—	↻	**1**
P21	—	—	—	—	—	**RANDOM**	S20

WIRING-2 (KEY, VIDEO2, DECK, HEAD, LED)

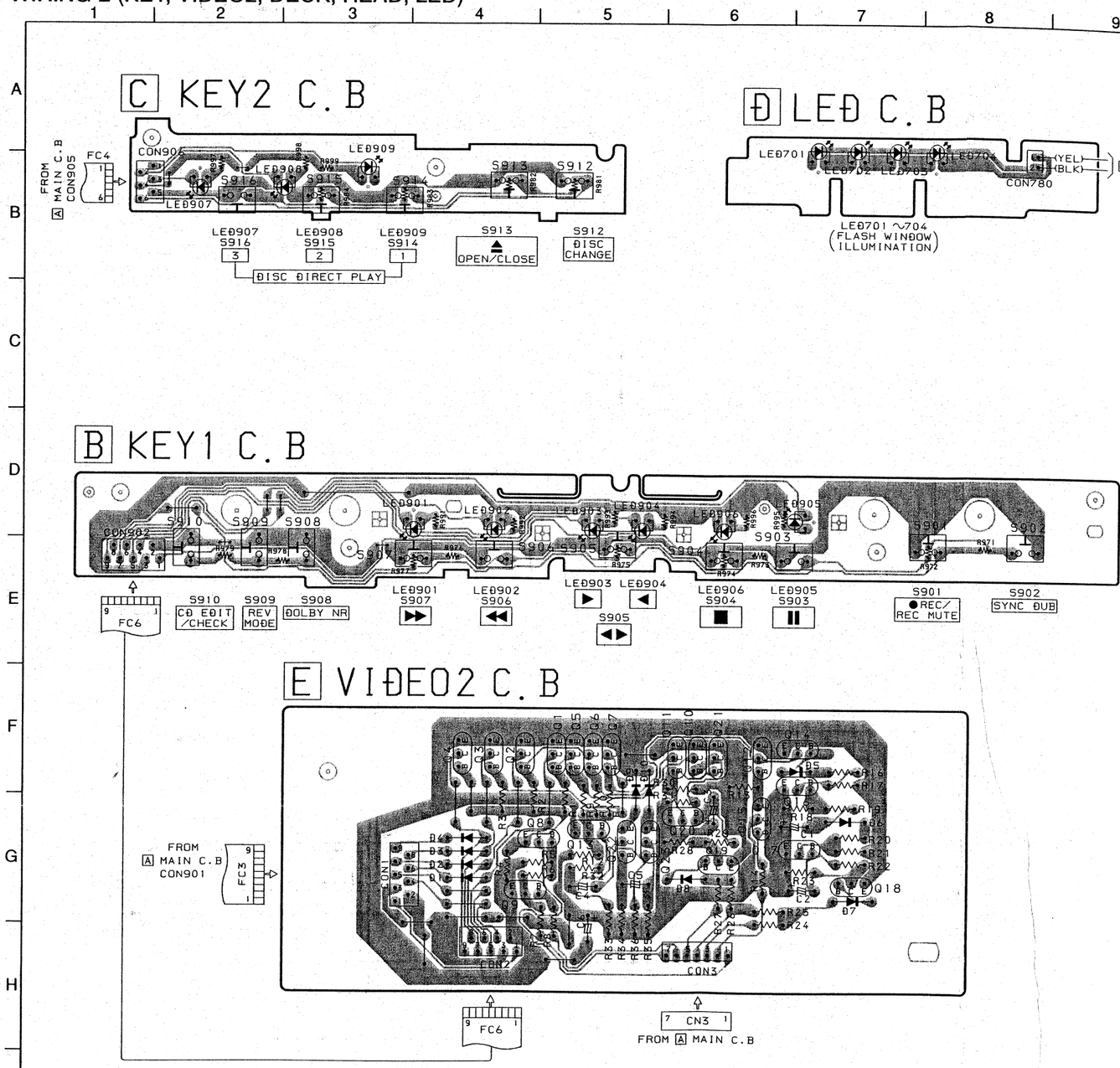

C KEY2 C.B

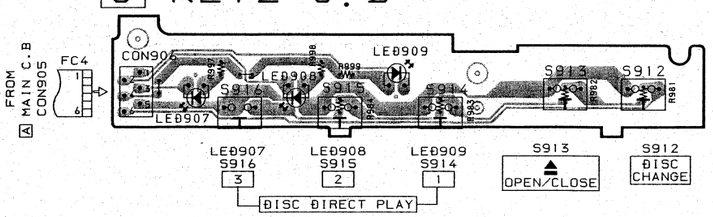

D LED C.B

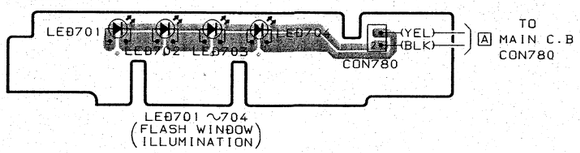

G DECK C.B

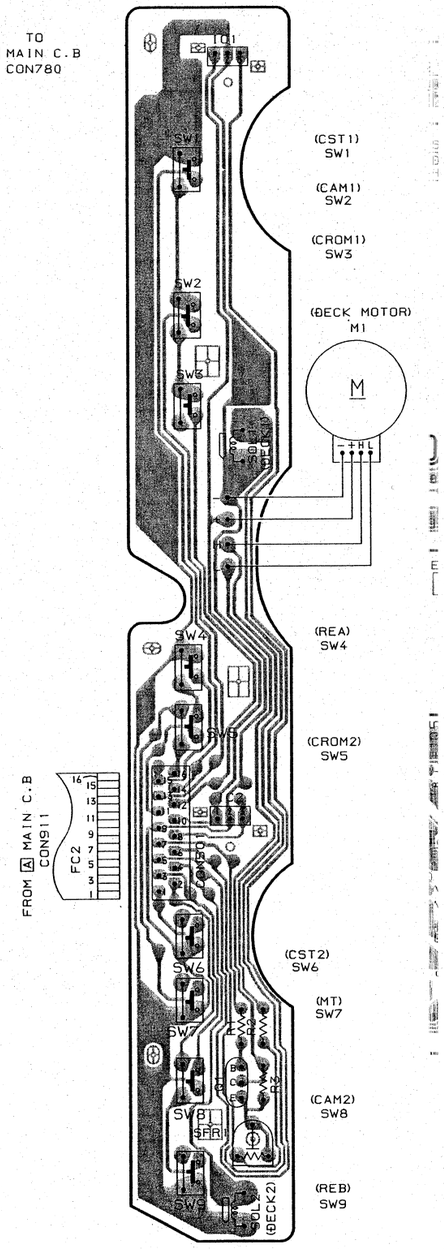

H HEAD-1 C.B

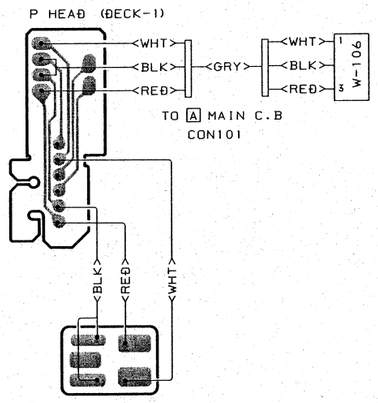

I HEAD-2 C.B

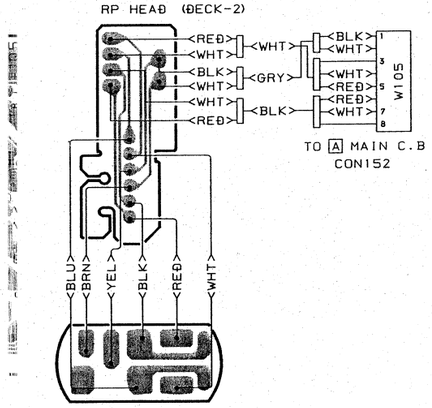

B KEY1 C.B

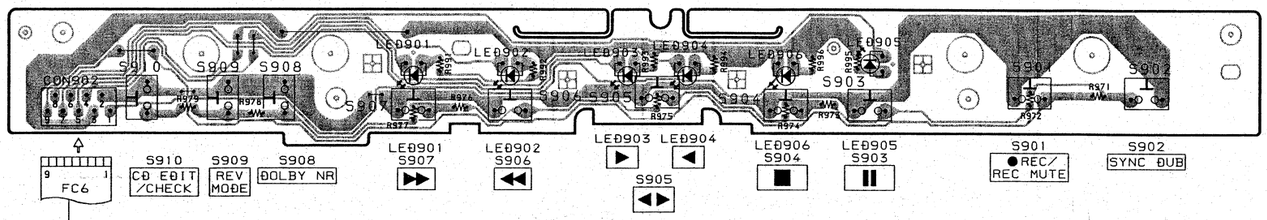

E VIDEO2 C.B

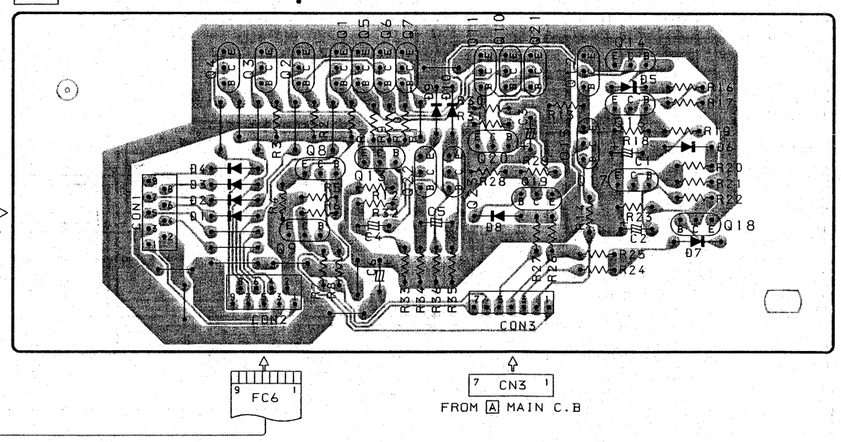

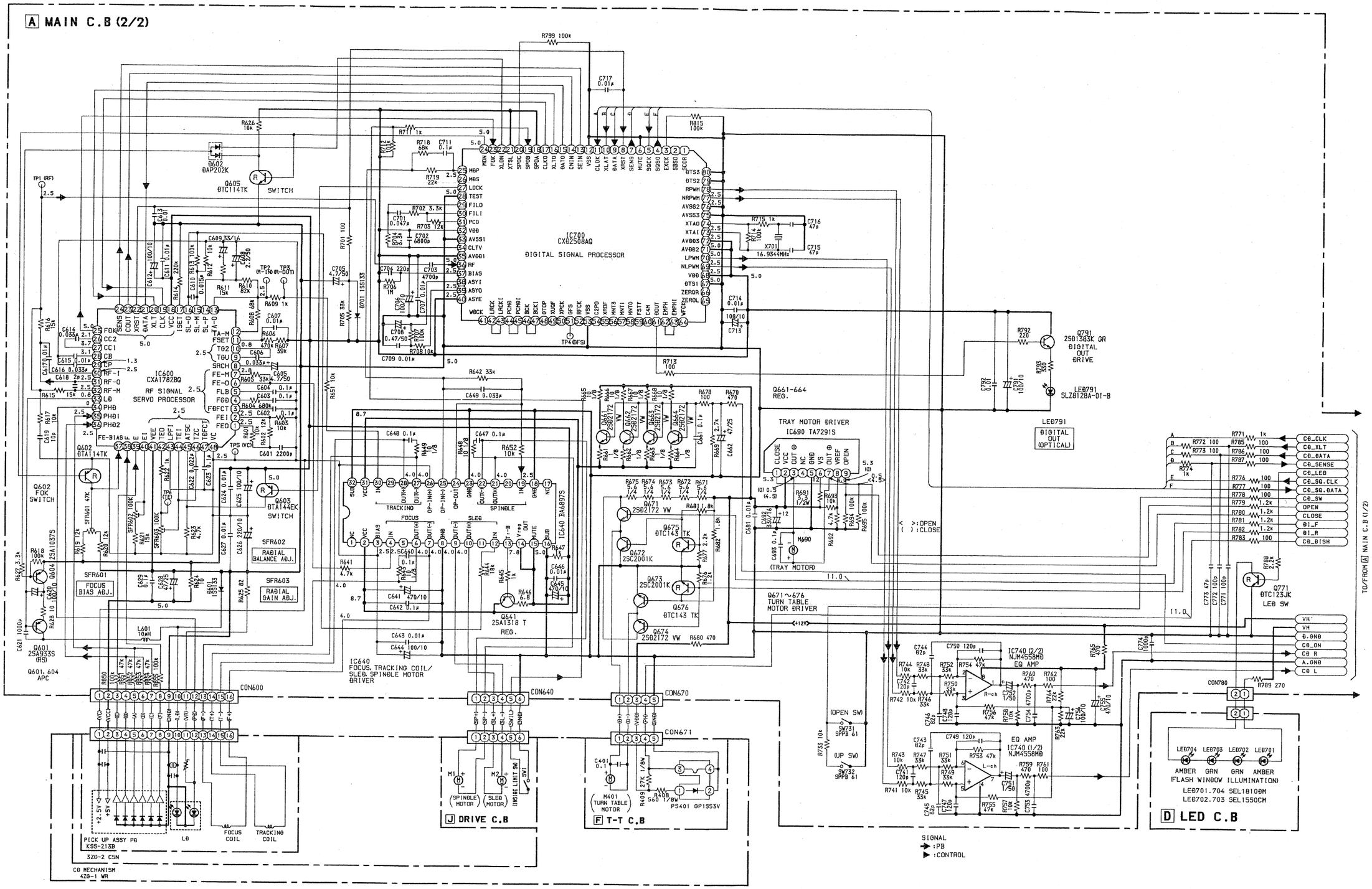
A MAIN C.B (2/2)
IC700 CXD2508AQ DIGITAL SIGNAL PROCESSOR
IC600 CXA1782BQ RF SIGNAL SERVO PROCESSOR
IC640 FOCUS, TRACKING COIL/ SLED, SPINDLE MOTOR DRIVER
TRAY MOTOR DRIVER IC690 TA7291S
Q671~676 TURN TABLE MOTOR DRIVER
Q661-664 REG.
IC740 (1/2) NJM4558MD EQ AMP
IC740 (2/2) NJM4558MD EQ AMP
Q791 2SD1365K GR DIGITAL OUT DRIVE
LED791 SLZ8128A-01-B
LED791 DIGITAL OUT (OPTICAL)
Q771 DTC123JK LED SW
LED704 LED703 LED702 LED701
AMBER GRN GRN AMBER
(FLASH WINDOW ILLUMINATION)
LED701.704 SEL1810BM
LED702.703 SEL1550CM
D LED C.B
J DRIVE C.B
F T-T C.B
PICK UP ASSY PB KSS-213B
3ZG-2 CSN
CB MECHANISM 4ZG-1 WR
(TRAY MOTOR)
(OPEN SW)
(UP SW)
(SPINDLE MOTOR)
(SLED MOTOR)
(TURN TABLE MOTOR)
OVERSE LIMIT SW
FOCUS COIL
TRACKING COIL
SIGNAL
:PB
:CONTROL
TO/FROM A MAIN C.B (1/2)
CB_CLK
CB_XLT
CB_DATA
CB_SENSE
CB_LED
CB_SG.CLK
CB_SG.DATA
CB_SW
OPEN
CLOSE
DI_F
DI_R
CB_DISH
VH
VH
D.GND
CB_ON
CB R
A.GND
CB L
CON600
CON640
CON670
CON671
CON780

IC DESCRIPTION

IC, LC866424V-5A61

Pin No.	Pin Name	I/O	Description
1	O-BEAT	O	REC beat output. (ON/$\overline{\text{OFF}}$)
2	O-HSP	O	High speed dubbing switch. (HIGH/$\overline{\text{NORMAL}}$)
3	O-DOLBY/ON	O	DOLBY IC switch output. (DOLBY ON/$\overline{\text{OFF}}$)
4	O-DOLBY/C	O	DOLBY IC mode switch output. (DOLBY $\overline{\text{B}}$/C)
5	O-CD/LED	O	Flash window output. (ON/$\overline{\text{OFF}}$)
6	O-$\overline{\text{SHIFT}}$	O	Microprocessor clock shift out during tuner reception.
7	$\overline{\text{RESET}}$	I	Reset input (Reset at "L").
8	I-$\overline{\text{AUTO 1}}$	I	Deck 1 auto stop input.
9	I-$\overline{\text{AUTO 2}}$	I	Deck 2 auto stop input.
10	VSS 1	-	GND.
11	CF 1	I	5.76 MHz oscillator.
12	CF 2	O	5.76 MHz oscillator.
13	VDD 1	-	Power supply input.
14	I-KEY 1	I	Key 1 A/D input.
15	I-KEY 2	I	Key 2 A/D input.
16	I-DS 1	I	Deck 1 mechanism switch input.
17	I-DS 2	I	Deck 2 mechanism switch input.
18	I-CD/$\overline{\text{SW}}$	I	CD mechanism switch A/D input.
19	I-CD/DISH	I	CD turntable photo sensor A/D input.
20	I-MS	I	Deck MS detection A/D input.
21	I-DS 3	I	Deck mechanism switch input (REC enable A/D input).
22	I-$\overline{\text{AC/OFF}}$	I	HOLD input.
23	I-CD/SENSE	I	CD microprocessor control SENSE input.
24	I-TYPE	I	TYPE select A/D input. (H : DOLBY C / L : DOLBY B)
25~26	O-FUNC/A~B	O	FUNCTION switch output.
27	O-R-SEL/A	O	Video signal switch. (VIDEO $\overline{\text{1}}$/2)
28	O-R-SEL/B	O	REC output switch. (ON/$\overline{\text{MUTE}}$)
29	O-R-SEL/C	O	Monitor output switch. ($\overline{\text{VIDEO}}$/CDG)
30	-	-	Not used.
31~37	G7~G1	O	FL grid output (G7~G1).
38~40	P21~P19	O	FL segment output P21~P19.
41	VDD2	-	Power supply input.
42	-VP	-	Power supply for FL display .
43~60	P18~P8	O	FL segment output P18~P8.
61	O-CLOSE	O	CD tray close data output.
62	O-OPEN	O	CD tray open data output.
63	O-DI/R	O	CD turntable reverse rotation output.
64	O-DI/F	O	CD turntable forward rotation output.
65	O-REC	O	Deck REC switch output.
66	O-$\overline{\text{SOL1}}$	O	Deck 1 plunger $\overline{\text{ON}}$/OFF output.

	AUX1	AUX2	TAPE	CD
A	0	1	0	1
B	0	0	1	1

67	O-$\overline{\text{SOL2}}$	O	Deck 2 plunger $\overline{\text{ON}}$/OFF output.
68	O-$\overline{\text{MOTOR}}$	O	Deck motor $\overline{\text{ON}}$/OFF output.
69	O-RMT	O	REC mute $\overline{\text{ON}}$/OFF output.
70	O-STB	O	Front shift register, data latch strobe output.
71	O-CLK	O	Front shift register, data transfer clock output.
72	O-DATA	O	Front shift register, data output.
73	VSS2	-	GND.
74	I/O/SERIAL	I/O	Command input / output with the CD microprocessor.
75	O-CD/DATA	O	CD microprocessor control data output.
76	O-CD/XLT	O	CD microprocessor control latch output.
77	O-CD/CLK	O	CD microprocessor control clock output.
78	I-CD/SQ,DATA	I	CD SUB-Q data input.
79	O-CD/SQ,DATA	O	CD SUB-Q clock output.
80	O-MUTE	O	System mute ON/$\overline{\text{OFF}}$ output.

IC, CXD2508AQ

Pin No.	Pin Name	I/O	Description
1	SCOR	O	1H when the subcode sync S0 or S1 is detected.
2	SBSO	O	SUBP ~ W serial output.
3	EXCK	I	Clock input for SBSO read out.
4	SQSO	O	SUBQ 80-bit serial output.
5	SQCK	I	Clock input for SQSO read out.
6	MUTE	I	H to mute. L to cancel. (Connected to GND)
7	SENS	O	SENS signal output to MAIN CPU.
8	XRST	I	System reset. L to reset.
9	DATA	I	Serial data input from MAIN CPU.
10	XLAT	I	Latch input from MAIN CPU. Latching serial data at fall down.
11	CLOK	I	Clock input from MAIN CPU to transfer serial data.
12	VSS	-	GND.
13	SEIN	I	SENS input from SSP.
14	CNIN	I	Numbers of track jump are counted and input.
15	DATO	O	Serial data output to SSP.
16	XLTO	O	Serial data latched output to SSP. Latched at fall down edge.
17	CLKO	O	Clock input from SSP to transfer serial data.
18	TEST2	I	TEST. (Connected to +5V)
19~21	SPOB~D	I	Input from INSIDE LIMIT switch (SW1).
22	XLON	O	Mute control output.
23	FOK	I	Focus OK input pin. Used for SENS output and servo auto sequencer.
24	MON	O	Spindle motor ON/OFF control output.
25	MDP	O	Spindle motor servo control output.
26	MDS	O	Spindle motor servo control output.
27	LOCK	O	GFS is sampled by 460Hz. H output when GFS is H. L output when GFS is L for 8 consecutive times.
18	TEST1	I	TEST. (Connected to GND)
19	FILO	O	Filter output to master PLL. (Slave = digital PLL)
30	FILI	I	Filter input to master PLL.
31	PCO	O	Charge-pump output to master PLL.
32	VDD	-	Power supply input. (+5V)
33	AVSS1	-	GND.
34	CLTV	I	VCO control voltage input to master PLL.
35	AVDD1	-	Power supply input. (+5V)
36	RF	I	EFM signal input.
37	BIAS	I	Constant current input to asymmetry correction circuit.
38	ASYI	I	Comparator voltage input to asymmetry correction circuit.
39	ASYO	O	EFM full swing output. (L = VSS, H = VDD)
40	ASYE	I	L: asymmetry correction OFF. H: asymmetry correction ON. (Connected to +5V)
41	WCDK	O	D/A interface, word clock (2Fs) for 48-bit slot.

Pin No.	Pin Name	I/O	Description
42	LRCK	O	D/A interface, LR clock (FS) for 48-bit slot.
43	LRCKI	I	LR clock input to DAC. (48-bit slot)
44	PCMD	O	D/A interface, serial data. (2's complement, MSB first)
45	PCMDI	I	Audio data input to DAC. (48-bit slot)
46	BCK	O	D/A interface, bit clock.
47	BCKI	I	Bit clock input to DAC. (48-bit slot)
48	GTOP	O	GTOP output.
49	XUGF	O	XUGF output.
50	XPCK	O	XPLCK output.
51	GFS	O	GFS output.
52	RFCK	O	RFCK output.
53	VSS	-	GND.
54	C2PO	O	C2PO output.
55	XROF	O	XRAOF output.
56	MNT3	O	MNT3 output.
57	MNT1	O	MNT1 output.
58	MNT0	O	MNT0 output.
59	FSTT	O	Pins-73 and -74 divided-by 2/3 output.
60	C4M	O	4.2336MHz output.
61	DOUT	O	Digital Out connector output signal.
62	EMPH	O	H when the play back disk has emphasis. L when it does not.
63	EMPHI	I	DAC emphasis ON/OFF. H when ON. L when OFF.
64	WFCK	O	WFCK (WRITE FRAME CLOCK) output.
65	ZEROL	O	Not sound data detection output. H (L-ch) when no sound data is detected.
66	ZEROR	O	Not sound data detection output. H (L-ch) when no sound data is detected.
67	DTSI	I	TEST for DAC. (Connected to GND)
68	VDD	-	Power supply input. (+5V)
69	NLPWM	O	L-ch PWM output. (Reversed polarity)
70	LPWM	O	L-ch PWM output. (Normal polarity)
71	AVDD2	-	Power supply input to L-ch PWM driver. (Connected to +5V)
72	AVDD3	-	Power supply input to X'tal. (Connected to +5V)
73	XTAI	I	X'tal input to 33.8688MHz oscillator circuit.
74	XTAO	O	33.8688MHz X'tal oscillator circuit output.
75	AVSS1	-	Power supply input to X'tal. (Connected to GND)
76	AVSS2	-	Power supply input to PWM driver. (Connected to GND)
77	NRPWM	O	R-ch PWM output. (Reversed phase)
78	RPWM	O	R-ch PWM output. (Normal phase)
79	DTS2	I	TEST-2 for DAC. (Connected to GND)
80	DTS3	I	TEST-3 for DAC. (Connected to GND)

IC, CXA1782BQ

Pin No.	Pin Name	I/O	Description
1	FEO	O	Focus error amplifier output pin. This pin is connected to the FZC comparator input internally.
2	FEI	I	Focus error input pin.
3	FDFCT	I	Capacitor connection pin for time constant used when there is defect.
4	FGD	I	Corrects the focus servo high frequency gain.
5	FLB	I	This is a pin where the time constant is externally connected to raise the low frequency gain of the focus servo.
6	FEO	O	Focus drive output.
7	FEM	I	Focus amplifier inverted input pin.
8	SRCH	I	This is a pin where the time constant is externally connected to generate the focus search waveform.
9	TGU	I	This is a pin where the selection time constant is externally connected to set the tracking servo the high frequency gain.
10	TG2	I	This is a pin where the selection time constant is externally connected to set the tracking high frequency gain.
11	FSET	I	Pin for setting peak of the phase compensator of the focus tracking.
12	TAM	I	Tracking amplifier inverted input pin.
13	TAO	O	Tracking drive output.
14	SLP	I	Sled amplifier non-inverted input pin.
15	SLM	I	Sled amplifier inverted input pin.
16	SLO	O	Sled drove output.
17	ISET	I	The current which determines height of the focus search, track jump and sled kick is input.
18	VCC	-	+5V power supply pin.
19	CLK	I	Serial data transfer clock input from DSP.
20	XLT	I	Latch input from DSP.
21	DATA	I	Serial data input from DSP.
22	XRST	I	Reset input pin. Reset at L.
23	COUT	O	Signal output to count the number of tracks.
24	SENS	O	FZC, DFCT, TZC, Gain or BAL is output depending on the command to DSP.
25	FOK	O	Output pin of the focus OK comparator.
26	CC2	O	Input pin where the DEFECT bottom hold output is capacitance coupled.
27	CC1	I	DEFECT bottom hold output pin.
28	CB	I	This is a pin where the DEFECT bottom hold capacitor is connected.
29	CP	I	This is a pin where the MIRR hold capacitor is connected and MIRR comparator non-inverted signal is input.
30	RFI	I	Input pin where the RF summing amplifier output is capacitance coupled.
31	RFO	O	RF summing amplifier output pin. (TP1)
32	RFM	I	RF summing amplifier inverted input pin. Gain of RF amplifier is determined by the resistor connected between RFO and this pin.

Pin No.	Pin Name	I/O	Description
33	LD	O	APC amplifier output pin.
34	PHD	I	APC amplifier input pin.
35~36	PHD1~2	I	RF I-V amplifier inverted input pin. These pins are connected to the A+C and B+D pins of the optical pickup.
37	BIAS	I	Bias adjustment pin of the non-inverted side of the focus error amplifier.
38~39	F~E	I	F and E IV amplifier non-inverted input pins. These pins are connected to the F and E of the optical pickup.
40	EI	-	Gain adjustment pin of the I-V amplifier E.
41	VEE	-	GND connection pin.
42	TEO	O	Tracking error amplifier output pin.
43	LPFI	I	BAL adjustment comparator input pin.
44	TEI	I	Tracking error input pin.
45	ATSC	I	Window comparator input pin for detecting ATSC.
46	TZC	I	Tracking zero-cross comparator input pin.
47	TDFCT	I	Capacitor connection pin for the time constant used when there is defect.
48	VC	O	DC voltage output pin of VREF. (VDD/2)

IC BLOCK DIAGRAM

IC, TA7291S

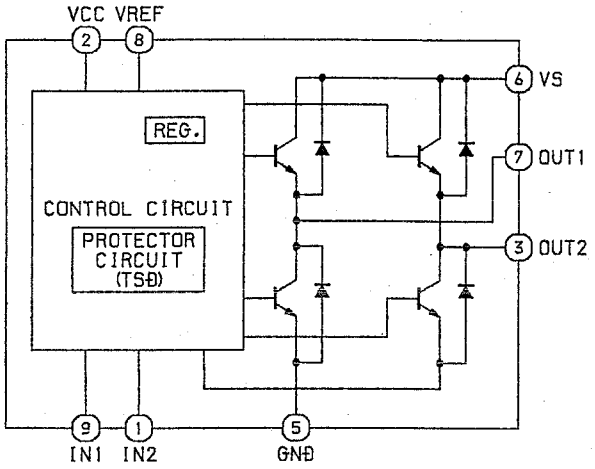

TRUTH TABLE

INPUT		OUTPUT		MODE
IN1	IN2	OUT1	OUT2	
0	0	∞	∞	STOP
1	0	H	L	CW/CCW
0	1	L	H	CCW/CW
1	1	L	L	BRAKE

∞ :HIGH IMPEDANCE
INPUT IS "H" ACITVE

IC, BA6897S

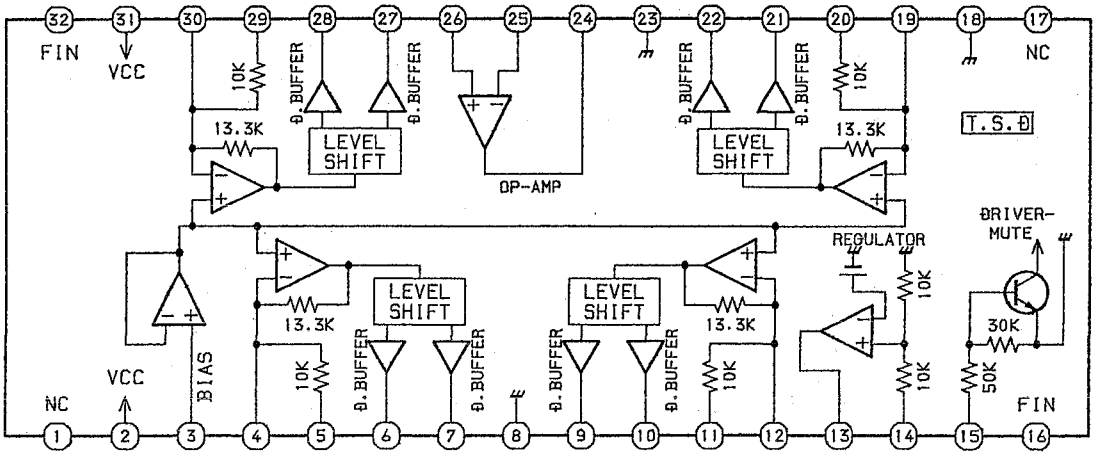

T.S.D:Thermal shift down circuit
D.BUFFER:Drive Buffer

TEST MODE

1. How to Activate CD Test Mode
   Insert the AC plug while pressing the CD EDIT/CHECK/button. All FL display tubes will light up, and the test mode will be activated.

2. How to cancel CD Test Mode
   Either one of the following operations will cancel the CD test mode.
   • Press the power switch button. • Disconnect the AC plug.

3. CD Test Mode Functions
   When test mode is activated, the following mode functions can be used by pressing the operation keys.

Mode	Operation	FL display	Operation	Contents
Start mode	Test mode activation	All FL light up	• Laser diode illuminated under normal circumstances (CD block power supply ON)	Displays the machine mode that it is a test mode. All FL displays light up
Search mode	■ key	— ——	• Continual focus search * NOTE 1 (The pickup lens repeats the full-swing up-down motion.) * Avoid continual searches that last for more than 10 minutes.	FOCUS SERVO • Laser current measurement (Across R628 resistor) • Check focus search waveform • Check focus error waveform * FOK / FZC are not monitored in the search mode.
Play mode	▶ key	/ —	• Normal playback • Focus search is continued if TOC cannot be read * NOTE 1	FOCUS SERVO / TRACKING SERVO CLV SERVO / SLED SERVO Check FOK / FZC
Traverse mode	▮▮key	/ —	• During normal disc playback Press once; tracking servo OFF Press twice; tracking servo ON * NOTE 2	TRACKING SERVO ON / OFF Tracking balance (traverse) adjustment TP6(SFR602)
Sled mode	⏮ key ⏭	All FL light up	• Pickup moves to the outermost track • Pickup moves to the innermost track * NOTE 3 (During playback, machine operates normally.)	SLED SERVO Check SLED mechanism operation

* NOTE 1: There are cases when the tracking servo cannot be locked owing to the protection circuit being operated when heat builds up in the driver IC if the focus search is operated continually for more than 10 minutes. In these cases, the power supply should be switched off for 10 minutes until heat has been reduced and then re-started.

* NOTE 2: Do not press the ⏮ or ⏭ keys when the machine is in the ▮▮ status is active. If they are pressed, playback will not be possible after the ▮▮ status has been canceled. If the ⏮ or ⏭ keys are pressed in the ▮▮ status, press the ■ key and return to start mode (No. 1).

* NOTE 3: When pressing the ⏮ or ⏭ keys, take care to avoid damage to the gears. Because the sled motor is activated when the ⏮ or ⏭ keys are pressed, even when the pick-up is at the outermost or innermost track.

4. Operation Outline
   The operation of each mode is carried out in the direction of the arrows from the start mode as indicated in the following illustration.

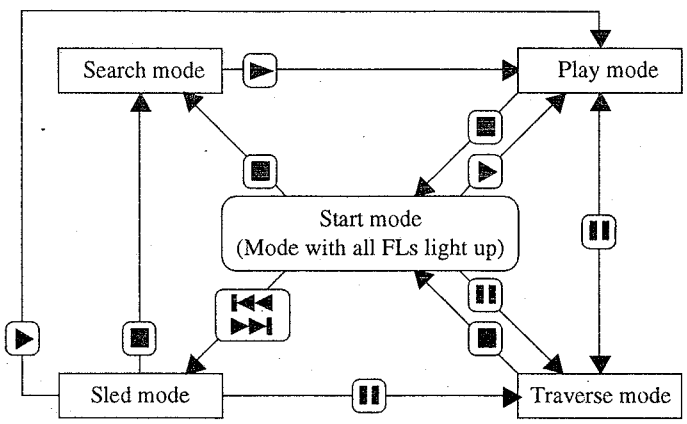

ELECTRICAL ADJUSTMENT

A MAIN C.B

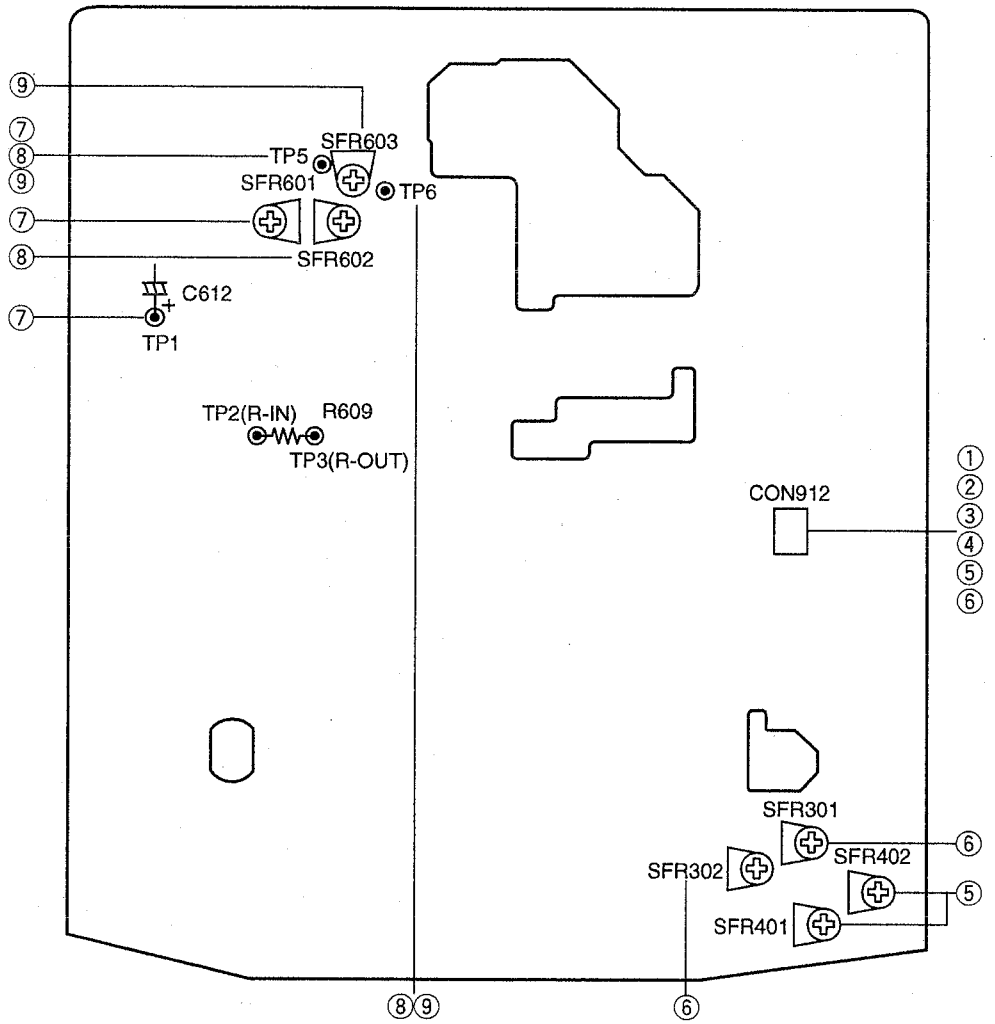

G DECK C.B

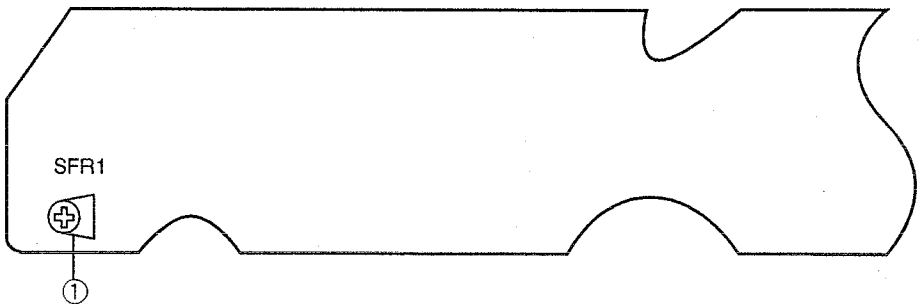

DECK R/P E HEAD

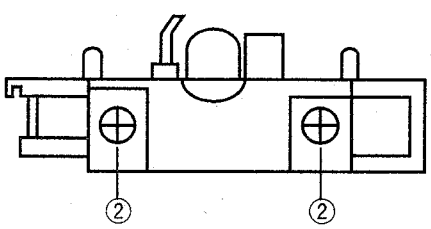

< DECK SECTION >

1. Tape Speed Check
   Settings : • Test tape : TTA–100
   • Test point : TP CONN 3P (CON 912)
   • Adjustment location : SFR1
   Method : Play back the test tape and check for 3000Hz ± 5Hz.
   (NOTE) : RVS SIDE SPEED SPECIFICATION
   FWD SIDE SPECIFICATION ±45Hz

2. Head Azimuth Adjustment (DECK 1,2)
   Settings : • Test tape : TTA–300
   • Test point : TP CONN 3P (CON 912)
   • Adjustment location : Head azimuth adjustment screw
   Method : Play back the 10kHz signal of the test tape and adjust screw so that the output becomes maximum. Next, perform on each FWD PLAY and REV PLAY mode.

3.PB Sensitivity Check (DECK 1,2)
   Settings : • Test tape : TTA-200
   • Test point : TP CONN 3P (CON 912)
   Method : Playback the test tape and check for outputlevel becomes 300mV ± 5mV.

4. PB Frequency Response Check
   Settings : • Test tape : TTA–300
   • Test point : TP CONN 3P (CON 912)
   Method : Play back the 315Hz and 10kHz signals of the test tape and check output difference to within 0dB ± 2dB,and the 10kHz signal with respect to that of the 315Hz signal is 2dB.

5. REC / PB Frequency Responce Adjustment
   Settings : • Test tape : TTA-602
   • Test point : TP CONN 3P (CON 912)
   • Input signal :1kHz/10kHz (VIDEO2/AUX IN)
   • Adjustnent location : SFR401(Lch) SFR402(Rch)
   Method : Establish the record mode. Adjust the CON 912 signal to 210mV and attenuate to -20dB. Record and playback 1kHz and 10kHz. Adjust SFR so that level difference between 1kHz and 10kHz is 0dB ± 0.3dB.

6. REC/PB Sensitivity Adjustment (DECK 2)
   Settings : • Test tape : TTA-602
   • Test point : TP CONN 3P (CON 912)
   • Input signal : 1kHz/10kHz (VIDEO2/AUX IN)
   •Adjustment location : SFR301 (Lch) SFR302 (Rch)
   Method : Apply a 1kHz signal and REC mode. Then adjust OSC attenuator so that the output level at the TP CONN 3P(CON 912) becomes 21mV. Record and playback the 1kHz signal and adjust SFRs so that the output is 21mV ± 0.5dB.

PRACTICAL SERVICE FIGURE

<DECK SECTION>

Tape speed :	3000Hz ± 45Hz
Wow & flutter :	Less than 0.35% (R.M.S)
Take-up torque :	30 ~ 55g-cm (FWD, REV)
F.F & REW torque :	75 ~ 180g-cm
Back tension :	2 ~ 7g-cm (FWD, REV)
Distortion :	Less than 2.0% (PB, AC)
	Less than 3.0% (REC/PB, AC)
Noise level :	Less than 50mV (PB, AC)
	Less than 50mV (REC/PB, AC)
Signal to noise ratio :	More than 40dB (PB, AC)
	More then 38dB (REC/PB, AC)
Erasing ratio :	More than 60dB (at 125Hz)
Test tape :	TTA–602

<CD SECTION>

Note :
Connect a probe (10:1) of the osilloscope or the frequency counter to a test point.

7. Focus Bias Adjustment
   Make the focus bias adjustment when replacing and repairing the optical block.

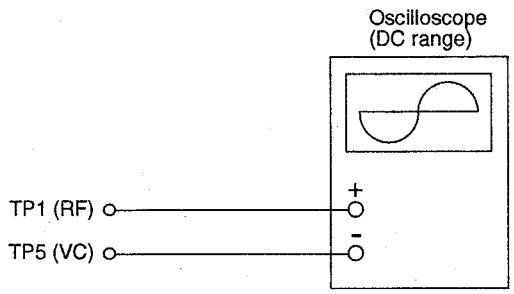

1) Connect an oscilloscope to the test points TP1 (RF) and TP5 (VC).
2) Turn on the power switch.
3) Insert test disc TCD-782 (YEDS-18) and play back the second composition.
4) Adjust SFR601 so that RF signal of the test point TP1 (RF) is MAX and CLEARREST.

RF signal waveform

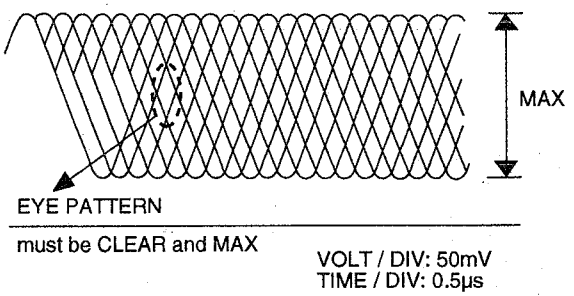

Note:

The current of the laser signal can be checked with the voltages on both sides of R628 (10Ω). The difference for the specified value shown on the level must be within ± 6.0mA.

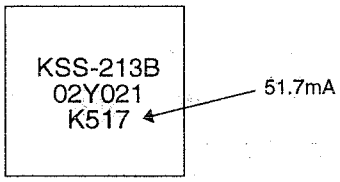

$$\text{Laser current Iop} = \frac{\text{Voltage across R628}}{10}$$

8. Tracking Balance Adjustment

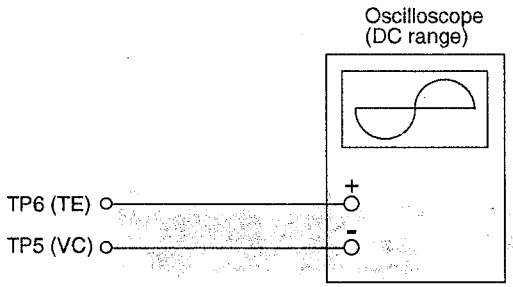

1) Connect an oscilloscope to the test points TP6 (TE) and TP5 (VC).
2) Start the CD test mode.
3) Insert test disc TCD-782 (YEDS-18) and become traverse mode of CD test mode.
4) Adjust SFR602 so that the traverse waveform on the oscilloscope is vertically symmetrical as shown in the figure below.
5) After the adjustment is completed, remove the connected lead wires from the terminals.
6) Cansel the CD test mode.

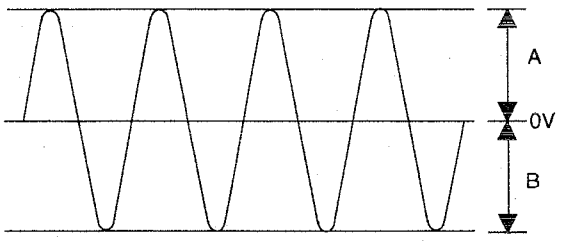

A=B

VOLT / DIV: 20mV
TIME / DIV: 1mS

9. Tracking Gain Adjustment

A servo analyzer is necessary in order to perform this adjustment exactly. However, this gain has a margin, so even if it is slightly off, there is no problem. Therefore, do not perform this adjustment. Focus/tracking gain determines the pick-up follow-up (vertical and horizontal) relative to mechanical noise and mechanical shock when 2-axis device operates. However, as these gains are reciprocate, the adjustment is performed at the point where both gains are satisfied.

- When gain is raised, the noise increases when the 2-axis device operates increases.
- When gain is lowered, it is more susceptible to mechanical shock and skipping occurs more easily.

When the gain adjustment is not satisfied, the symptoms below appear.

Symptoms \ Gain	(Focus)	Tracking
• The time until music starts becomes longer for STOP → -PLAY or automatic selection (⏮, ⏭ buttons pressed.) (Normally takes about 2 seconds.)	low	low or high
• Music does not start and disc continues to rotate for STOP → -PLAY or automatic selection (⏮, ⏭ buttons pressed.)	–	low
• Disc stops to rotate shortly after STOP → -PLAY.	low or high	–
• Sound is interrupted during PLAY. Or time counter display stops.	–	low
• More noises during the 2-axis device operation.	high	high

The following is simple adjustment method.

– Simple adjustment –

Note: Since exact adjustment cannot be performed, remember the positions of the controls before performing the adjustment.
If the positions after the simple adjustment are only a little different, return the controls to the original position.

Procedure:

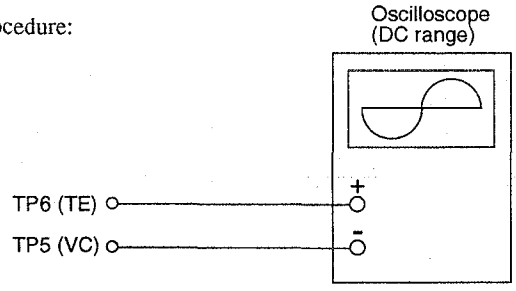

1) Keep the set horizontal. (If the set is not kept horizontally, this adjustment cannot be performed due to the gravity against the 2-axis device.)
2) Insert test disc TCD-782 (YEDS-18) and play back the second composition.
3) Connect an oscilloscope to TP6 (TE) of the MAIN C.B.
4) Adjust SFR603 so that the waveform appears as shown in the figure below. (tracking gain adjustment)

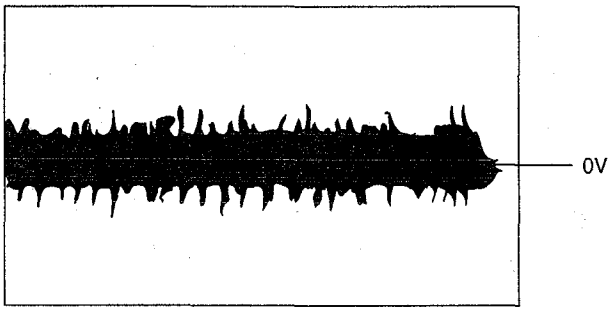

VOLT / DIV: 50mV
TIME / DIV: 1mS

- Incorrect example

Low tracking gain
(The fundamental wave appears as compared with the waveform adjusted)

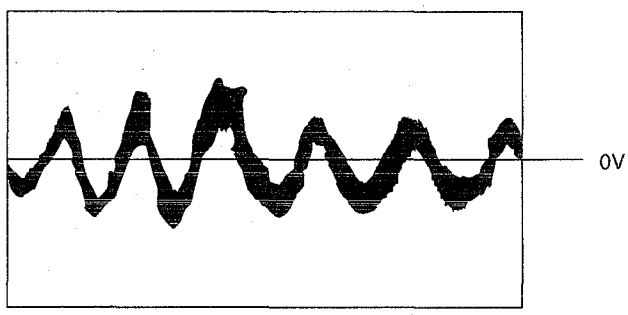

VOLT / DIV: 50mV
TIME / DIV: 1mS

High tracking gain
(The frequency of the fundamental wave is higher than in low gain)

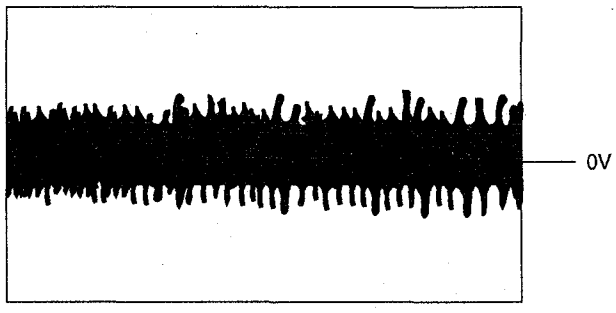

VOLT / DIV: 50mV
TIME / DIV: 1mS

MECHANICAL EXPLODED VIEW 1 ／ 1

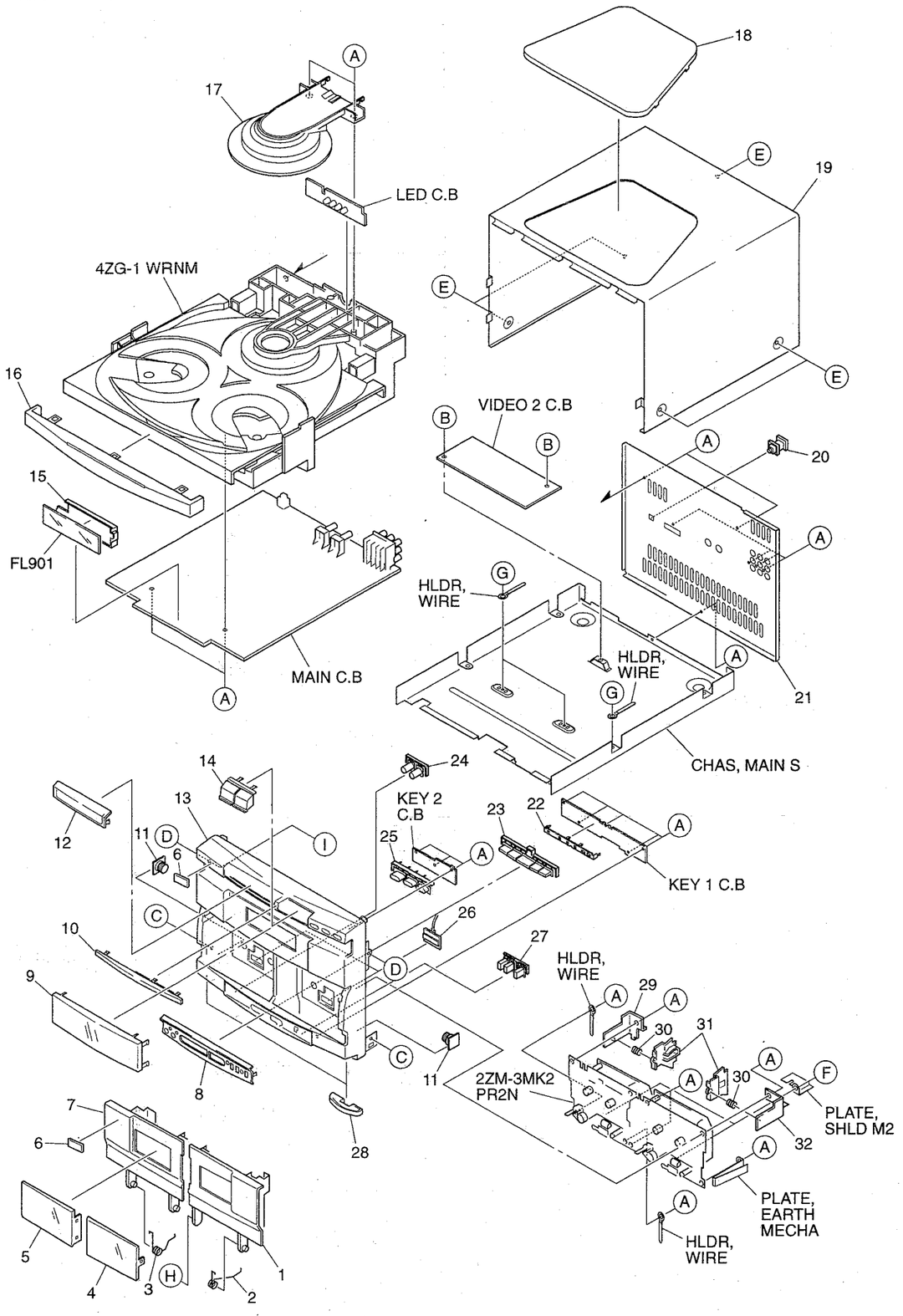

MECHANICAL PARTS LIST 1 ／ 1

DESCRIPTIONで判断できない物は “REFERENCE NAME LIST” を参照してください。
If can’t understand for Description please kindly refer to “REFERENCE NAME LIST”.

REF. NO	PART NO.	カンリ NO.	DESCRIPTION
1	86-NV1-004-019		BOX,CASS 2
2	83-NV4-202-119		SPR-T,EJECT 2
3	83-NV4-201-119		SPR-T,EJECT 1
4	86-NV1-009-019		WINDOW,CASS 2
5	86-NV1-008-019		WINDOW,CASS 1
6	82-NE8-032-019		BADGE AIWA 27.5
7	86-NV1-003-019		BOX,CASS 1
8	86-NV1-015-019		PANEL,CONTROL
9	86-NV1-006-019		WINDOW,DISPLAY
10	86-NV1-016-019		PANEL,CD
11	87-063-165-019		OIL-DMPR 150
12	86-NV1-007-019		WINDOW,CD
13	86-NV1-001-019		CABI,FR<YJ,YL>
13	86-NV1-020-019		CABI,FR U<YU>
14	86-NV1-011-019		KEY,OPEN
15	86-NT1-203-019		GUIDE,FL
16	86-NV1-005-019		PANEL,TRAY
17	84-ZG1-011-019		REFLECTOR,CD
18	86-NF6-007-019		WINDOW,TOP
19	86-NV1-017-019		CABI,STEEL
20	84-ZG1-245-019		CAP,OPTICAL
21	86-NV1-002-019		PANEL,REAR YJBNM<YJ>
21	86-NV1-021-019		PANEL,REAR YLBNM<YL>
21	86-NV1-019-019		PANEL,REAR YUBNM<YU>
22	86-NV1-202-019		GUIDE,LED
23	86-NV1-010-019		KEY,PLAY
24	86-NV1-013-019		KEY,REC
25	86-NV1-012-019		KEY,DISC
26	87-070-108-019		LED,SLF-301C-37
27	86-NV1-014-019		KEY,DOLBY
28	85-NC1-019-010		RING,FOOT
29	82-NF5-226-019		HLDR,LOCK 1N
30	82-NF5-228-019		SPR-C,LOCK
31	82-NF5-229-019		PLATE,LOCK
32	82-NF5-227-019		HLDR,LOCK 2N
A	87-067-703-019		BVT2+3-10 (W/O SLOT)
B	87-067-584-019		BVT2+3-6 W/O SLOT
C	87-591-094-419		QIT + 3 - 6 GOLD
D	87-721-097-419		QT2+3-12 GLD
E	87-067-641-019		UTT2+3-8 W/O SLOT BLK
F	87-571-032-419		VIT+2-3
G	87-571-092-419		VIT+3-4
H	82-NE8-215-019		W,4.2-6.8-0.18
I	85-NF7-599-019		PVC W,3.2-8-0.3

TAPE MECHANISM EXPLODED VIEW 1 ／ 1

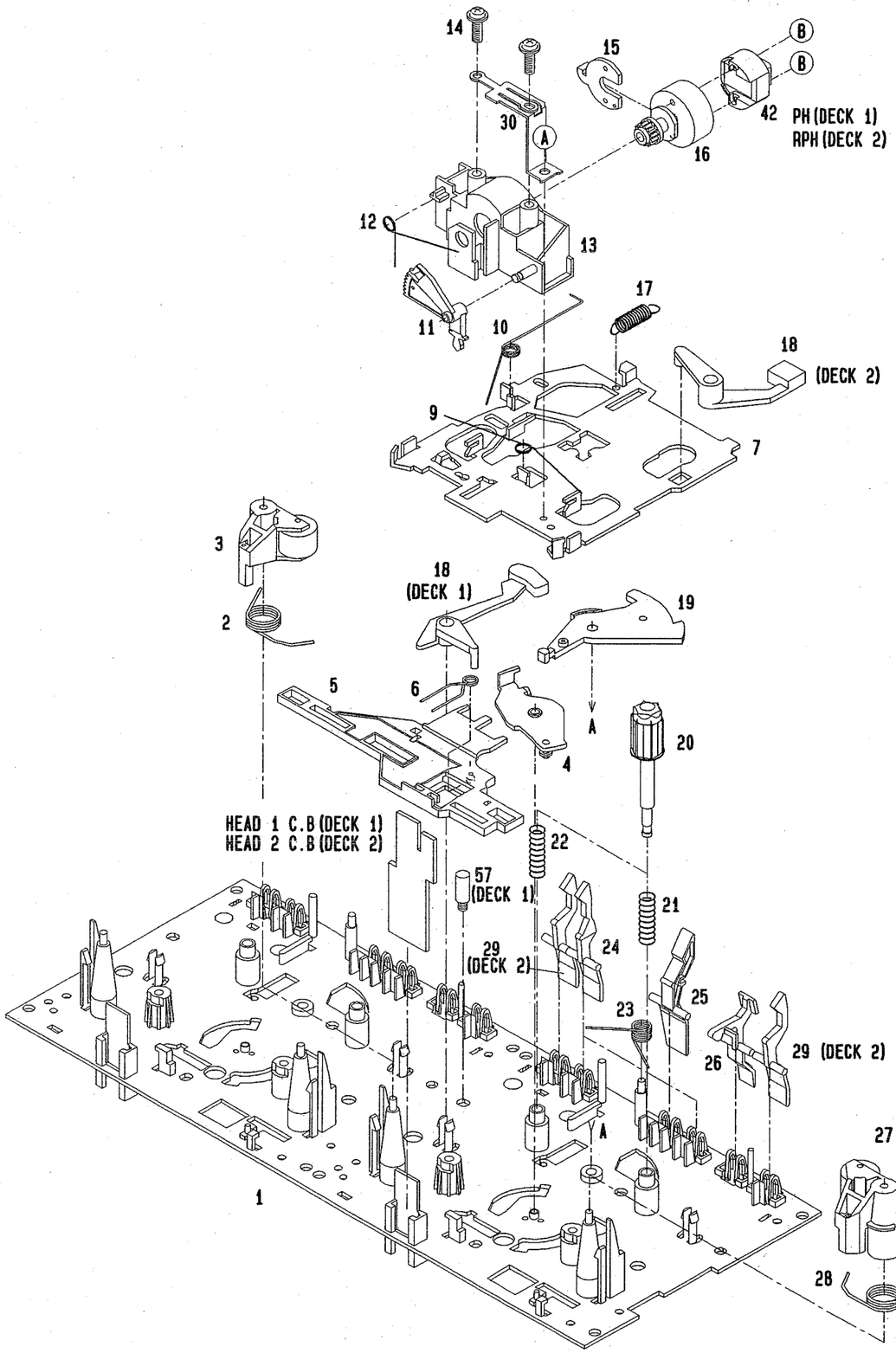

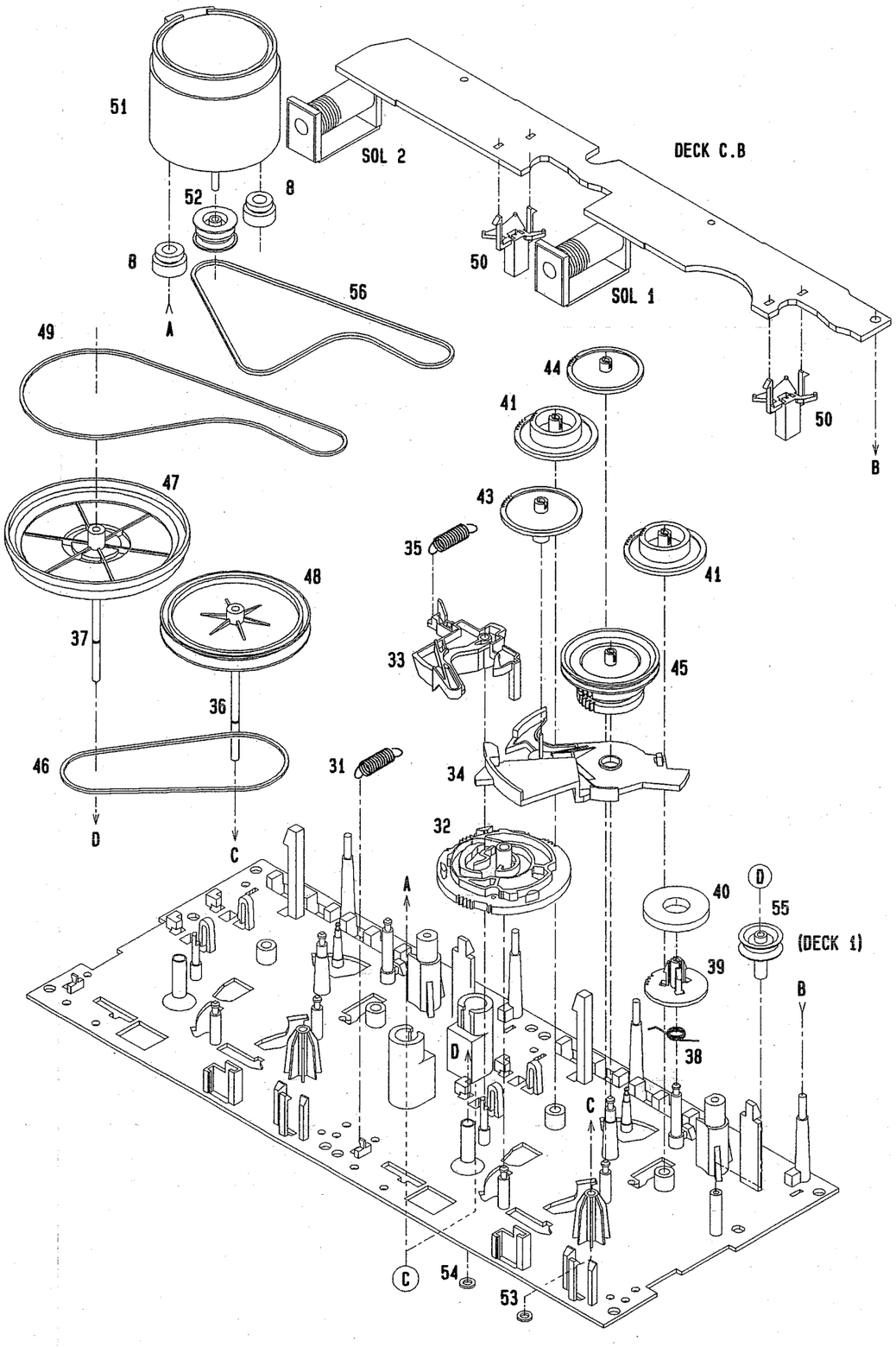

TAPE MECHANISM PARTS LIST 1 ／ 1

DESCRIPTIONで判断できない物は “REFERENCE NAME LIST” を参照してください。
If can't understand for Description please kindly refer to “REFERENCE NAME LIST”.

REF. NO	PART NO.	カンリ NO.	DESCRIPTION
1	82-ZM3-301-519		CHAS ASSY,M2
2	82-ZM1-258-110		SPR-T,PINCH L
3	82-ZM1-345-019		LVR ASSY,PINCH L W
4	82-ZM1-333-010		PLATE,LINK 2
5	82-ZM1-266-11K		LVR,DIR
6	82-ZM1-214-010		SPR-T,DIR
7	82-ZM1-206-81K		CHAS,HEAD
8	82-ZM3-307-019		CUSH-G,DIA3.7-8-3.2
9	82-ZM1-269-219		SPR-T,BRG
10	82-ZM1-219-119		SPR-T,LINK
11	82-ZM1-210-119		GEAR,H T
12	82-ZM1-213-019		SPR-T,HEAD
13	82-ZM1-207-619		GUIDE,TAPE
14	82-ZM1-283-310		S-SCREW,AZIMUTH
15	82-ZM1-314-119		PLATE,HEAD
16	82-ZM1-208-119		HLDR,HEAD
17	82-ZM1-218-019		SPR-E,HB
18	82-ZM1-263-110		LVR,EJECT L (DECK 1)
18	82-ZM1-264-010		LVR,EJECT R (DECK 2)
19	82-ZM1-222-21K		LVR,PLAY
20	82-ZM1-217-319		REEL TABLE
21	82-ZM1-244-510		SPR-C,BT
22	82-ZM1-285-310		SPR-C,BT L
23	82-ZM1-257-019		SPR-T,CAS
24	82-ZM1-241-319		LVR,MC
25	82-ZM1-242-019		LVR,CAS
26	82-ZM1-243-019		LVR,STOP
27	82-ZM1-346-019		LVR ASSY,PINCH R W
28	82-ZM1-259-110		SPR-T,PINCH R
29	82-ZM1-240-11K		LVR,REC (DECK 2)
30	82-ZM1-298-010		SPR-P,EARTH
31	82-ZM1-255-319		SPR-E,LVR DIR
32	82-ZM3-305-01K		GEAR,CAM M2
33	82-ZM1-227-21K		LVR,TRIG
34	82-ZM3-306-11K		LVR,FR M2
35	82-ZM1-265-119		SPR-E,TRIG
36	82-ZM1-236-019		CAPSTAN N 2-41.5
37	82-ZM1-239-019		CAPSTAN N 2.2-41.7
38	82-ZM1-322-019		SPR-T,FR60
39	82-ZM1-220-219		GEAR,IDLER
40	82-ZM3-616-019		RING MAGNET 4
41	82-ZM1-216-31K		GEAR,REEL
42	87-046-355-019		HEAD,PH HADKH2529B(PH)
42	87-046-356-019		HEAD,RPH HADKH5581B(RPH)
43	82-ZM1-225-21K		GEAR,FR
44	82-ZM1-226-019		GEAR,REW
45	82-ZM1-228-810		SLIP DISK ASSY
46	82-ZM1-338-010		BELT FR4
47	82-ZM1-238-81K		FLY-WHL ASSY,R (DECK 2)
47	82-ZM3-210-71K		FLY-WHL ASSY,R2 (DECK 1)
48	82-ZM1-235-51K		FLY-WHL ASSY,L (DECK 2)
48	82-ZM3-208-61K		FLY-WHL ASSY,L2 (DECK 1)
49	82-ZM3-329-210		BELT,SBU R2
50	82-ZM1-245-210		HLDR,IC
51	87-045-347-019		MOT,SHU2L 70(M1)
52	82-ZM3-221-010		PULLEY,MOT 2M
53	82-ZM1-288-019		SH,1.63-3.2-0.5 SLT
54	80-ZM6-243-019		SH,1.75-3.6-0.5 SLT
55	82-ZM3-304-110		PULLEY,COUPLER (DECK 1)
56	82-ZM3-328-110		BELT,SBU P2
57	82-ZM3-216-019		SHAFT,COUPLER N(DECK 1)
A	82-ZM1-315-010		S-SCREW,GVIDE TAPE
B	80-ZM6-207-019		V+1.6-7
C	82-ZM3-318-019		S-SCRW MOTOR M2
D	87-067-972-019		PW,1.05-3-0.25 SLT

SPRING APPLICATION POSITION

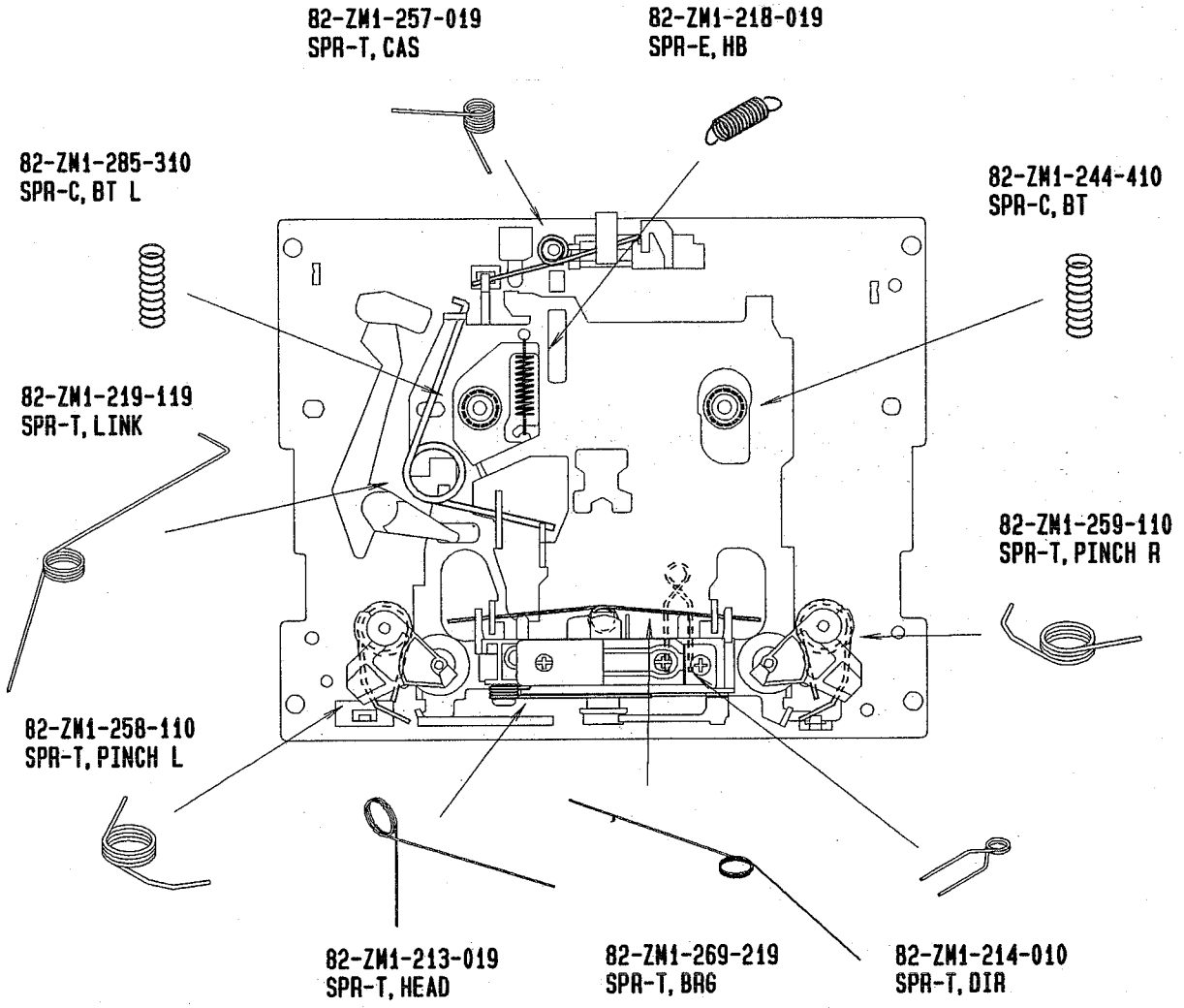

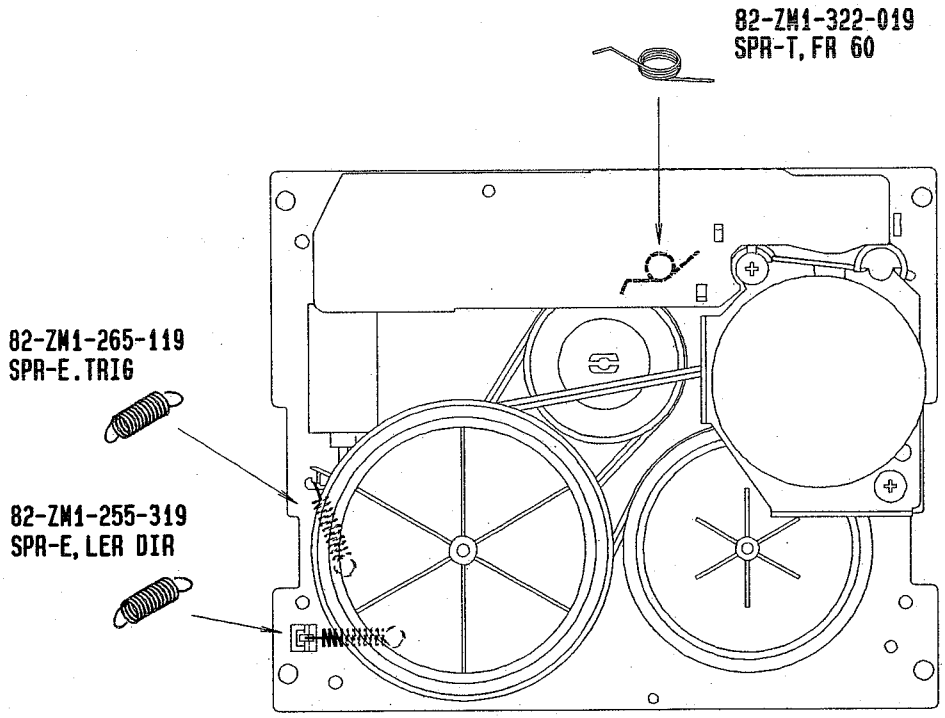

MODEL NO.

SX-ANH9/ANH90

SPEAKER EXPLODED VIEW 1 / 1

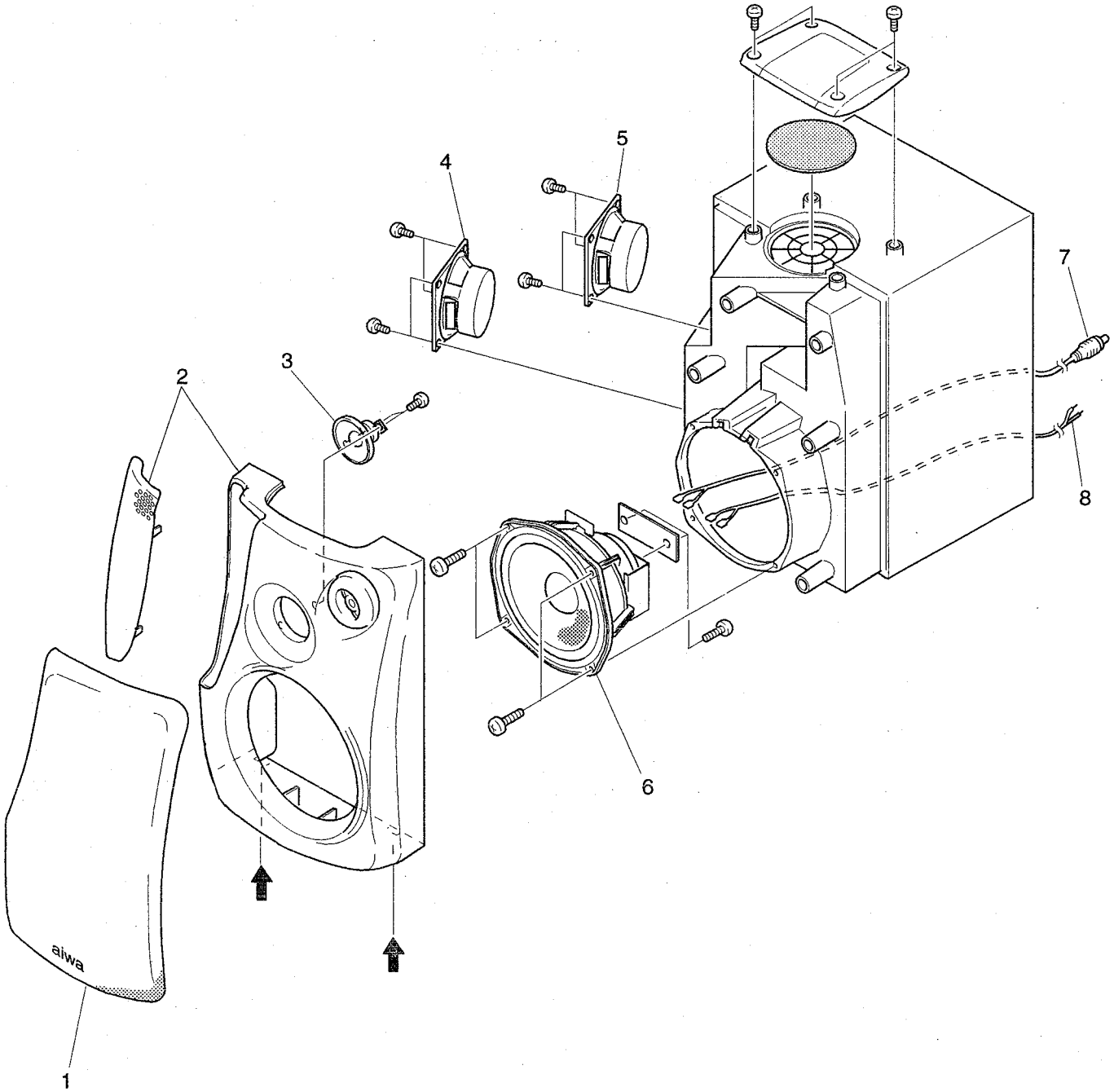

SPEAKER PARTS LIST 1 / 1

DESCRIPTIONで判断できない物は "REFERENCE NAME LIST" を参照してください。
If can't understand for Description please kindly refer to "REFERENCE NAME LIST".

REF. NO	PART NO.	カンリ NO.	DESCRIPTION
1	86-NS1-010-010		GRILLE FRAME ASSY,R
1	86-NS1-011-010		GRILLE FRAME ASSY,L
2	86-NS1-001-010		PANEL FR,R
2	86-NS1-002-010		PANEL FR,L
3	86-NS1-608-010		SPKR T 50
4	86-NS1-606-010		SPKR S 80
5	86-NS1-604-010		SPKR M 80
6	86-NS1-602-010		SPKR W 140H
7	85-NS6-611-019		SPEAKER CORD Y/B
8	83-NS5-613-019		SPEAKER CORD ASSY

■ ACCESSORIES/PACKAGE LIST

DESCRIPTIONで判断できない物は "REFERENCE NAME LIST" を参照してください。
If can't understand for Description please kindly refer to "REFERENCE NAME LIST".

REF. NO	PART NO.	ｶﾝﾘ NO.	DESCRIPTION
1	86-NT1-901-019		IB,HE(ECA)-M<HEJ,HRJ>
1	86-NT1-902-019		IB,LH(ES)-M<LH>
1	86-NT1-903-019		IB,U(EFS)-M<U>
2	85-NF5-631-019		RC-T501
3	87-006-225-019		AM LOOP ANT NC2
4	87-043-115-019		ANT,FEEDER FM
⚠5	87-099-789-019		PLUG,ADPTR IR44<EXCEPT U>

REFERENCE NAME LIST

ELECTRICAL SECTION

DESCRIPTION	REFERENCE NAME
ANT	ANTENNAS
C-	CHIP
C-CAP	CAP, CHIP
C-CAP TN	CAP, CHIP TANTALUM
C-COIL	COIL, CHIP
C-DI	DIODE, CHIP
C-DIODE	DIODE, CHIP
C-FET	FET, CHIP
C-FOTR	FILTER, CHIP
C-JACK	JACK, CHIP
C-LED	LED, CHIP
C-RES	RES, CHIP
C-SFR	SFR, CHIP
C-SLIDE SW	SLIDE SWITCH, CHIP
C-SW	SWITCH, CHIP
C-TR	TRANSISTOR, CHIP
C-VR	VOLUME, CHIP
C-ZENER	ZENER, CHIP
CAP, CER	CAP, CERA-SOL
CAP, E	CAP, ELECT
CAP, M/F	CAP, FILM
CAP, TC	CAP, CERA-SOL
CAP, TC-U	CAP, CERA-SOL SS
CAP, TN	CAP, TANTALUM
CERA FIL	FILTER, CERAMIC
CF	FILTER, CERAMIC
DL	DELAY LINE
E/CAP	CAP, ELECT
FILT	FILTER
FLTR	FILTER
FUSE RES	RES, FUSE
MOT	MOTOR
P-DIODE	PHOTO DIODE
P-SNSR	PHOTO SENSER
P-TR	PHOTO TRANSISTOR
POLY VARI	VARIABLE CAPACITOR
PPCAP	CAP, PP
PT	POWER TRANSFORMER
PTR, RES	PTR, MELF
RC	REMOTE CONTROLLER
RES NF	RES, NON-FLAMMABLE
RESO	RESONATOR
SHLD	SHIELD
SOL	SOLENOID
SPKR	SPEAKER
SW, LVR	SWITCH, LEVER
SW, RTRY	SWITCH, ROTARY
SW, SL	SWITCH, SLIDE
TC CAP	CAP, CERA-SOL
THMS	THERMISTOR
TR	TRANSISTOR
TRIMMER	CAP, TRIMMER
TUN-CAP	VARIABLE CAPACITOR
VIB, CER	RESONATOR, CERAMIC
VIB, XTAL	RESONATOR, CRYSTAL
VR	VOLUME
ZENER	DIODE, ZENER
サージサプレッサ	SERGESUPPRESSOR
セラコン	CAP,CERA

MECHANICAL SECTION

DESCRIPTION	REFERENCE NAME
ADHESHIVE	SHEET ADHESHIVE
AZ	AZIMUTH
BAR-ANT	BAR-ANTENNA
BAT	BATTERY
BATT	BATTERY
BRG	BEARING
BTN	BUTTON
CAB	CABINET
CASS	CASSETTE
CHAS	CHASSIS
CLR	COLLAR
CONT	CONTROL
CRSR	CURSOR
CU	CUSHION
CUSH	CUSHION
DIR	DIRECTION
DUBB	DUBBING
FL	FRONT LOADING
FLY-WHL	FLYWHEEL
FR	FRONT
FUN	FUNCTION
G-CU	G-CUSHION
HDL	HANDOL
HIMERON	CLOTH
HINGE, BAT	HINGE, BATTERY
HLDR	HOLDER
HT-SINK	HEAT SINK
IB	INSTRUCTION BOOKLET
IDLE	IDLER
IND, L-R	INDICATOR, L-R
KEY, CONT	KEY, CONTROL
KEY, PRGM	KEY, PROGRAM
KNOB, SL	KNOB, SLIDE
LBL	LABEL
LID, BATT	LID, BATTERY
LID, CASS	LID, CASSETTE
LVR	LEVER
P-SP	P-SPRING
PANEL, CONT	PANEL, CONTROL
PANEL, FR	PANEL, FRONT
PRGM	PROGRAM
PULLY, LOAD MO	PULLY, LOAD MOTOR
RBN	RIBBON
S-	SPECIAL
SEG	SEGMENT
SH	SHEET
SHLD-SH	SHIELD-SHEET
SL	SLIDE
SP	SPRING
SP-SCREW	SPECIAL-SCREW
SPACER, BAT	SPACER, BATTERY
SPR	SPRING
SPR-P	P-SPRING
SPR-PC-PUSH	P-SPRING, C-PUSH
T-SP	T-SPRING
TERM	TERMINAL
TRIG	TRIGGER
TUN	TUNING
VOL	VOLUME
W	WASHER
WHL	WHEEL
WORM-WHL	WORM-WHEEL
ジグアーム	ARM,SHAFT
ジグガイド	GUIDE,SHAFT
ストラップ	STRAP
トクナベ	S-SCREW
ヒンジ	HINGE
ヒンジビス	S-SCREW
ビスセレート	SCREW,SERRART